FS 56

STIHL

2 - 33 Instruction Manual

Contents

1 Guide to Using this Manual....2
2 Safety Precautions and Working Techniques....2
3 Approved Combinations of Cutting Attachment, Deflector, Handle and Harness....11
4 Mounting the Bike Handle....12
5 Mounting the Loop Handle....13
6 Fitting the Carrying Ring....15
7 Mounting the Deflector....15
8 Mounting the Cutting Attachment....16
9 Fuel....19
10 Fueling....20
11 Fitting the Harness....21
12 Balancing the Machine....21
13 Starting / Stopping the Engine....22
14 Transporting the Unit....25
15 Operating Instructions....25
16 Cleaning the Air Filter....25
17 Adjusting the Carburetor....26
18 Spark Plug....26
19 Engine Running Behavior....27
20 Storing the Machine....27
21 Sharpening Metal Cutting Blades....27
22 Maintaining the Mowing Head....28
23 Maintenance and Care....29
24 Minimize Wear and Avoid Damage....30
25 Main Parts....30
26 Specifications....31
27 Maintenance and Repairs....32
28 Disposal....32
29 EU conformity....33
30 Addresses....33

1 Guide to Using this Manual

1.1 Pictograms

The meanings of the pictograms attached to the machine are explained in this manual.

Depending on the model concerned, the following pictograms may be attached to your machine.

Fuel tank; fuel mixture of gasoline and engine oil

Operate decompression valve

Manual fuel pump

Operate manual fuel pump

Tube of grease

Intake air: Summer operation

Intake air: Winter operation

Handle heating

1.2 Symbols in text

Warning where there is a risk of an accident or personal injury or serious damage to property.

NOTICE

Caution where there is a risk of damaging the machine or its individual components.

1.3 Engineering improvements

STIHL's philosophy is to continually improve all of its products. For this reason we may modify the design, engineering and appearance of our products periodically.

Therefore, some changes, modifications and improvements may not be covered in this manual.

2 Safety Precautions and Working Techniques

Special safety precautions are necessary when working with this machine because of the very high speed of its cutting attachment.

Before commissioning, it is important to read and understand the User Manual and to keep it in a safe place for future reference. Failure to observe the User Manual may lead to serious or even fatal injury.

Comply with all applicable local safety regulations, e.g., by employers' liability insurance associations, social insurance systems, occupational safety authorities, etc.

If you have never used the power tool before: Have your dealer or other expert show you how

Original Instruction Manual
0000000931_043_GB

Printed on chlorine-free paper
Paper is recyclable.

© ANDREAS STIHL AG & Co. KG 2026
0458-547-0121-F. VA5.D26.

to safely operate your machine – or attend a specialist course.

Minors should never be allowed to use the motorized device – except for apprentices over the age of 16 when working under supervision.

Children, animals and onlookers must remain at a safe distance.

When not using the machine, it must be laid down in such a way that it does not endanger anyone. Ensure that the machine cannot be used without authorization.

The user is responsible for accidents or risks involving other persons or their property.

Do not lend or rent out your power tool without the User Manual. Be sure that anyone using it understands the information contained in this manual.

The use of machines that emit noise may be limited to certain hours of the day as specified by national and/or regional or local regulations.

Anyone operating the machine must be well rested, in good physical health and in a good state of mind.

If you have any condition that might be aggravated by strenuous work, check with your doctor before operating a machine.

If you have a pacemaker: The ignition system of your machine produces an electromagnetic field of very low intensity. This field may interfere with some pacemakers. STIHL recommends that persons with pacemakers consult their physician and the pacemaker manufacturer to minimize any health risk.

Anyone who has consumed alcohol, medications or drugs that impair their ability to react must not operate a power tool.

Depending on the cutting attachment fitted, use your power tool only for cutting grass, wild growth, shrubs, scrub, bushes, small diameter trees and similar materials.

The machine must not be used for any other purposes – **risk of accident!**

Only use cutting attachments and accessories that are explicitly approved for this power tool model by STIHL or are technically identical. If you have any questions in this respect, consult your dealer. Use only high-quality parts and accessories. Otherwise there is a risk of accidents and damage to the power tool.

STIHL recommends the use of genuine STIHL tools and accessories. They are specifically designed to match the product and meet your performance requirements.

Never attempt to modify your power tool in any way since this may increase the risk of personal injury. STIHL excludes all liability for personal injury and damage to property caused while using unauthorised attachments.

The guard provided with your machine may not protect the operator from all foreign objects (gravel, glass, wire etc.) ejected by the revolving cutting attachment. Ejected objects may also ricochet and strike the operator.

Do not use a high-pressure washer to clean the power tool. The solid jet of water may damage parts of the unit.

2.1 Clothing and equipment

Wear proper protective clothing and equipment.

Clothing must be sturdy but allow complete freedom of movement. Wear close-fitting clothes such as a boiler suit, not a loose jacket.

Do not wear clothing that could become trapped in wood, brush or moving parts of the machine. Do not wear a scarf, necktie or jewelry. Tie up and secure long hair above your shoulders.

Wear safety boots with steel toe caps and non-slip soles.

Alternatively, sturdy shoes with non-slip shoes are permissible only when using mowing heads.

WARNING

To reduce the risk of eye injuries, wear close-fitting safety glasses in accordance with European Standard EN 166, EN ISO 16321. Make sure the safety glasses fit snugly.

Wear face protection and make sure it fits well. Face protection alone is not sufficient to protect the eyes.

Wear "personal" sound protection, e.g., ear defenders.

Wear a safety hard hat for thinning operations, when working in high scrub and where there is a danger of head injuries from falling objects.

Wear sturdy protective gloves made of a resistant material (e.g. leather).

STIHL offers a comprehensive range of personal protective equipment.

2.2 Transporting the power tool

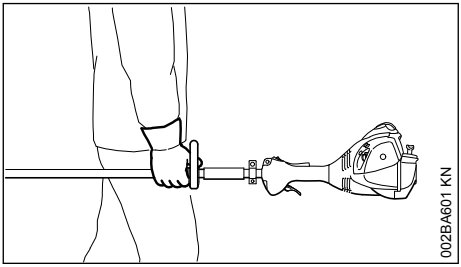

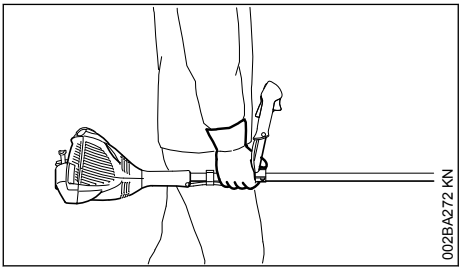

Always stop the engine.

Carry the machine hanging on the harness or by the shaft so that it is balanced.

To reduce the risk of cut injuries, fit transport guard on the cutting attachment, even when carrying the tool for short distances – see also "Mounting the Transport Guard".

Avoid touching hot parts of the machine and gearbox – **risk of burns!**

By vehicle: When transporting in a vehicle, properly secure your machine to prevent turnover, damage and fuel spillage.

2.3 Refueling

Gasoline is highly flammable – keep away from fire or flame – do not spill any fuel – no smoking.

Always shut off the engine before refueling.

Do not fuel a hot engine – **fuel may spill and cause a fire.**

Open the fuel cap carefully to allow any pressure build-up in the tank to release slowly and to prevent fuel spraying out.

Only refuel the machine in a well ventilated place. If fuel has been spilled, immediately clean the machine – do not allow your clothes to be splashed with fuel. If that happens, change your clothes at once.

After refueling, close the fuel cap as tightly as possible.

This helps reduce the risk of engine vibrations causing an incorrectly tightened fuel cap to loosen or come off and spill fuel.

Check for leaks. Do not start the engine if there is a fuel leak – **serious or fatal burns could result!**

2.4 Before starting

Check that your power tool is properly assembled and in good condition – refer to appropriate chapters in the User Manual.

- Check the fuel system for leaks, especially the visible parts, e. g., fuel cap, hose connections, manual fuel pump (only in machines with a manual fuel pump). In case of leakage and damage, do not start the engine – **risk of fire!** Have the machine serviced by a dealer before using it
- Use only an approved combination of cutting attachment, deflector, handle and harness. All parts must be assembled properly and securely
- The stop switch/slide control must be easy to actuate
- Check the choke lever, throttle trigger and throttle trigger lockout for smooth action – throttle trigger must return automatically to idle position. The choke lever must spring back from the and positions to the run position I when the throttle trigger lockout and throttle trigger are squeezed
- Check that the spark plug boot is secure – a loose boot may cause sparking that could ignite combustible fumes **and cause a fire!**
- Cutting attachment or interchangeable attachment: correctly fitted, secure and in perfect condition
- Safety devices (e. g., deflector for cutting attachments, rider plate) for damage and/or wear. Always replace damaged parts. Do not use the machine with a damaged deflector or worn rider plate (if the writing and arrows are no longer discernible)

– Never attempt to modify the controls or safety devices.
– Keep the handles dry and clean – free from oil and dirt – this is important for safe control of the machine.
– Adjust the harness and handle(s) to suit your height and reach Note the information in the chapters "Fitting the Harness" and "Balancing the Machine".

The power tool must only be operated when it is in good operating condition – **Risk of accident!**

To prepare for emergencies when using a harness: Practice setting down the machine quickly. To avoid damage, do not throw the machine to the ground when practicing.

2.5 Starting the engine

Start the engine at least 3 meters from the refueling spot and only outdoors.

Place the unit on firm ground in an open area. Make sure you have good balance and secure footing. Hold the unit securely. The cutting attachment must be clear of the ground and all other obstructions because it may begin to run when the engine starts.

This is a one-person machine – ensure that there is no-one within 15 meters of the machine, not even when starting the power tool! **Risk of injury** due to ejected objects!

Avoid contact with the cutting attachment – **risk of injury!**

Do not drop-start the power tool – start the engine as described in the User Manual. The cutting attachment continues to run for a short while when the throttle trigger is released – **flywheel effect!**

Check engine idling: The cutting attachment must remain at a standstill when the engine idles – throttle trigger released.

Keep easily combustible materials (e.g., wood chips, bark, dry grass, fuel) away from hot exhaust gases and hot muffler surfaces – **risk of fire!**

2.6 Holding and guiding the power tool

Always hold the unit firmly with both hands on the handles.

Make sure you always have a firm and secure footing.

2.6.1 For versions with bike handle

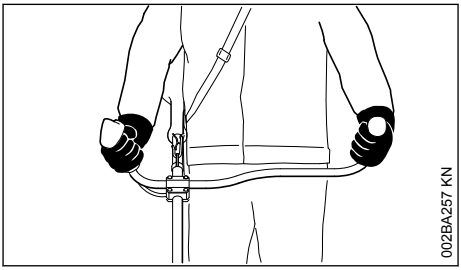

Right hand on control handle, left hand on grip on handlebar.

2.6.2 For versions with loop handle

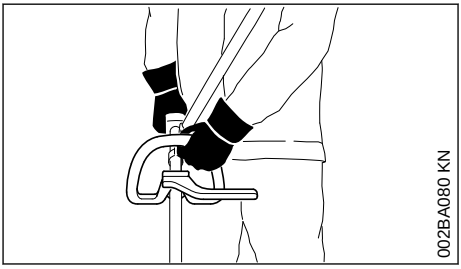

Left hand on loop handle, right hand on control handle, even if you are left-handed.

2.7 While working

Make sure you always have a firm and secure footing.

In the event of impending danger or in an emergency, shut off the engine immediately – move the stop switch / slide control in the direction of **0**.

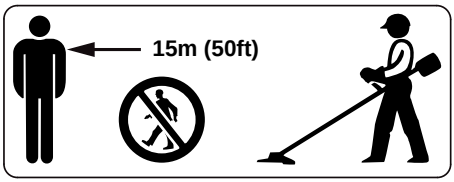

There is a risk of accident from ejected objects within a wide area around the working space, so make sure that there is no-one within a 15 m radius of the power tool. This distance must also be maintained in relation to objects (vehicles, window panes) – **risk of property damage!** Even at distances beyond 15 m, the danger cannot be ruled out.

Check that the engine is properly idling so that the cutting tool will not continue rotating after you release the throttle trigger.

Check and correct the idle speed setting at regular intervals. If the cutting attachment still rotates at idle speed, have your dealer make proper adjustments or repairs. STIHL recommends you have this work done by a STIHL servicing dealer.

Take special care in slippery conditions – **damp, snow, ice,** on slopes or uneven ground.

Watch out for obstacles: tree stumps, roots – **risk of tripping or stumbling!**

Only work while standing on the ground, never on a ladder, work platform or other unstable surface.

Be particularly alert and cautious when wearing hearing protection because your ability to hear warnings (shouts, alarms, etc.) is restricted.

Take breaks when you start getting tired or feeling fatigue – **risk of accidents!**

Work calmly and carefully – in daylight conditions and only when visibility is good. Proceed with caution, do not put others in danger.

As soon as the engine starts running, the power tool generates toxic exhaust gas. These gases may be odorless and invisible and may contain unburned hydrocarbons and benzene. Never run the engine indoors or in poorly ventilated locations, even if your model is equipped with a catalytic converter.

To reduce the risk of **serious or fatal injury from breathing toxic fumes**, ensure proper ventilation when working in trenches, hollows or other confined locations.

Stop work immediately if you start suffering from nausea, headaches, impaired vision (e.g. your field of vision gets smaller), impaired hearing, dizziness, or impaired concentration – these symptoms may possibly be the result of too-high exhaust gas concentration – **Risk of accidents!**

Operate your power tool in such a way that it produces a minimum of noise and emissions – do not run the engine unnecessarily, accelerate the engine only when working.

To reduce the risk of fire, **do not smoke** while operating or standing near your power tool. Combustible fuel vapor may escape from the fuel system.

Dust, fumes and smoke produced while working may be hazardous to health. Wear respiratory protection in case of heavy dust or smoke emission.

If your power tool is subjected to unusually high loads for which it was not designed (e.g. heavy impact or a fall), always check that it is in good condition before continuing work – see also "Before Starting".

Check in particular that the fuel system has no leaks and the safety equipment is fully operative. Never use a power tool that is no longer safe to operate. In case of doubt, contact a STIHL authorized dealer.

Do not operate your power tool with the choke lever in the warm start position – the engine speed cannot be controlled in this position.

To **reduce the risk of injury** from ejected objects, never operate the unit without the correct deflector for the type of cutting attachment being used.

Check the work site – rocks, metal objects etc. could get caught up and ejected – potentially beyond a distance of 15 m – **risk of injury!** Such objects can also damage the cutting attachment and other property (e.g. parked vehicles, windows) (property damage).

Be particularly careful when working on difficult, densely grown terrain.

When mowing in high bushes, under shrubbery and hedges: Hold the cutting tool at a working height of at least 15 cm – to avoid risks to animals.

Always shut off the engine before leaving the unit unattended.

Examine the cutting attachment periodically at short intervals and as soon as you perceive any noticeable changes:
- Stop the engine, hold the machine securely, allow the cutting attachment to come to a stop
- Check condition and tightness; note any cracks
- Ensure that the cutting blades are sharp
- Replace damaged or blunt cutting attachments immediately, even in the event of minor hairline cracks

Clean grass and plant residue off the cutting attachment mounting at regular intervals – remove any accumulated material from the cutting attachment and deflector.

To reduce the risk of injury, shut off the engine before replacing the cutting attachment.

The gearbox gets hot during operation. Never touch the gearbox – **risk of burns!**

If a rotating cutting attachment touches a rock or another hard object, sparks may be generated which may possibly ignite combustible materials. Dried-out plants and undergrowth are combustible, especially during hot and dry weather. If there is a risk of fire, do not use cutting attachments in the vicinity of combustible materials, dried-out plants or brushwood. It is mandatory that you ask the responsible forestry office about current fire hazards.

2.8 Using mowing heads

Extend the cutting attachment deflector with the attached parts specified in the User Manual.

Only use a deflector with a properly fitted blade, which limits the mowing line to the permissible length.

For manually adjustable mowing heads, always switch off the engine before adjusting the mowing line – **risk of injury!**

Misuse with mowing lines that are too long reduces the working speed of the engine. The constant slipping of the clutch causes overheating and damage to important components (e. g. clutch, plastic housing parts) – e. g. due to the cutting attachment rotating during idling – **risk of injury!**

2.9 When using metal cutting attachments

STIHL recommends the use of original STIHL metal cutting attachments. These have been optimized for the machine and the user's requirements.

Metal cutting attachments rotate very fast, generating forces acting on the attachments and on the cuttings. generating forces acting on the attachments and on the cuttings.

Metal cutting attachments must be sharpened in regular intervals in accordance with the instructions.

Unevenly sharpened metal cutting attachments generate an imbalance which may cause extreme loads on the machine – **risk of breakage!**

Dull or improperly sharpened cutting edges can put a higher load on the cutting attachment and increase the **risk of injury**from cracked or broken parts.

After each contact of the metal cutting attachment with hard objects (e.g. stones, rocks, metal parts), check it for damage (e.g. tears and deformation). Burrs and other visible accumulated material must be removed since it may come loose at any time while the machine is running and then be ejected – **risk of injury!**

Do not continue using or attempt to repair damaged or cracked cutting attachments by means of welding, straightening or modifying the shape (unbalanced).

Particles or fragments may come off and hit the operator or a bystander at a high speed – **risk of very severe injuries!**

To reduce the above-named risks involved in operating a metal cutting attachment, ensure that the diameter of your metal cutting attachment is not too big. Also, the attachment must not be too heavy. It must be made of high-quality materials and have a suitable geometry (shape, thickness).

A metal cutting attachment not made by STIHL must not have a different weight, thickness, shape or larger diameter than the largest STIHL metal cutting attachment approved for this machine – **risk of injury!**

2.10 Vibrations

Prolonged use of the power tool may result in vibration-induced circulation problems in the hands (whitefinger disease).

No general recommendation can be given for the length of usage because it depends on several factors.

The period of usage is prolonged by:
- Hand protection (wearing warm gloves)
- Work breaks

The period of usage is shortened by:
- Any personal tendency to suffer from poor circulation (symptoms: frequently cold fingers, tingling sensations).
- Low outside temperatures.
- The force with which the handles are held (a tight grip restricts circulation).

Continual and regular users should monitor closely the condition of their hands and fingers. If any of the above symptoms appear (e.g. tingling sensation in fingers), seek medical advice.

2.11 Maintenance and Repairs

Service the machine regularly. Do not attempt any maintenance or repair work not described in the instruction manual. Have all other work performed by a servicing dealer.

STIHL recommends that you have servicing and repair work carried out exclusively by an authorized STIHL servicing dealer. STIHL dealers are regularly given the opportunity to attend training courses and are supplied with the necessary technical information.

Only use high-quality replacement parts in order to avoid the risk of accidents and damage to the machine. If you have any questions in this respect, consult a servicing dealer.

STIHL recommends the use of genuine STIHL replacement parts. These parts are specifically designed to match your machine model and meet your performance requirements.

To reduce **the risk of injury** from unintentional engine startup, **always shut off the engine and disconnect the spark plug boot** before performing any repairs, maintenance or cleaning work. – Exception: Carburetor and idle speed adjustments.

Do not turn the engine over on the starter with the spark plug boot or spark plug removed since there is otherwise a **risk of fire** from uncontained sparking.

To reduce the **risk of fire**, do not service or store your machine near open flames.

Check the fuel filler cap for leaks at regular intervals.

Use only a spark plug of the type approved by STIHL and make sure it is in good condition – see "Specifications".

Inspect the ignition lead (insulation in good condition, secure connection).

Check the condition of the muffler.

To reduce the **risk of fire and damage to hearing**, do not operate your machine if the muffler is damaged or missing.

Do not touch a hot muffler since **burn injury** will result.

2.12 Symbols on Deflectors

An **arrow** on the deflector shows the correct direction of rotation of the cutting attachments.

Some of the following symbols are applied to the outside of the deflector to indicate the approved combination of cutting tool and deflector.

Use deflector in combination with mowing heads only. Do not use metal cutting attachments.

Do not use deflector with brush knives or circular saw blades.

Do not use deflector with mowing heads.

Use deflector in combination with grass cutting blades only.

2.13 Shoulder strap

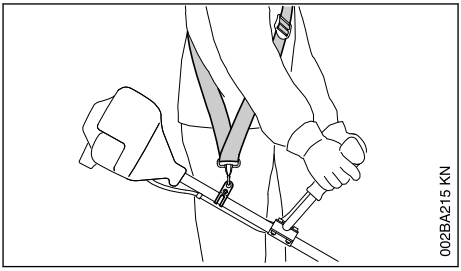

- Use a shoulder strap.
- With the engine running, attach the machine to the shoulder strap.

Grass cutting blades must always be used in combination with a shoulder strap.

2.14 Mowing Head with Nylon Line

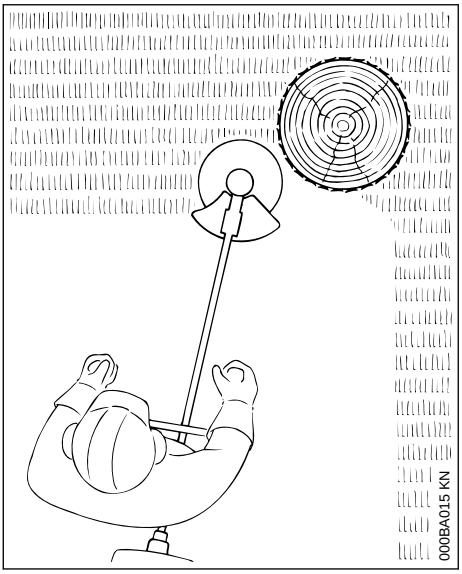

Nylon line achieves a soft cut for edging and trimming around trees, fence posts, etc. – less risk of damaging tree bark.

The mowing head comes with an instruction leaflet. Refill the mowing head with nylon line as described in the instruction leaflet.

WARNING

To reduce the risk of serious injury, never use wire or metal-reinforced line in place of the nylon line.

2.15 STIHL Polycut Mowing Head with Polymer Blades

For mowing unobstructed edges of meadows (without posts, fences, trees or similar obstacles).

Check the wear limit marks!

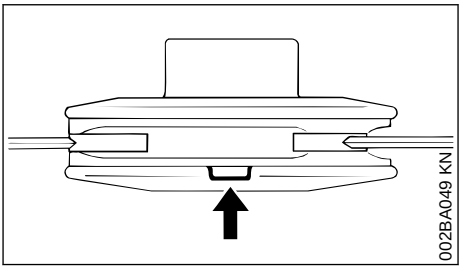

If one of the wear limit marks on the PolyCut mowing head is worn through (arrow): Do not continue using the mowing head. Install a new one. There is otherwise a **risk of injury** from thrown parts of the head.

It is important to follow the maintenance instructions for the PolyCut mowing head.

The PolyCut can also be equipped with mowing line in place of the polymer blades.

The mowing head comes with instruction leaflets. Equip the mowing head with polymers blades or nylon line as described in the instruction leaflets.

WARNING

Never use wire in place of the nylon mowing line – **risk of injury**.

2.16 Risk of Kickout (Blade Thrust) with Metal Cutting Attachments

WARNING

When using metal cutting attachments there is a risk of kickout when the rotating blade comes into contact with a solid object such as a tree trunk, branch, tree stump, rock or similar. The machine is thrown to the right or to the rear – opposite to the attachment's direction of rotation.

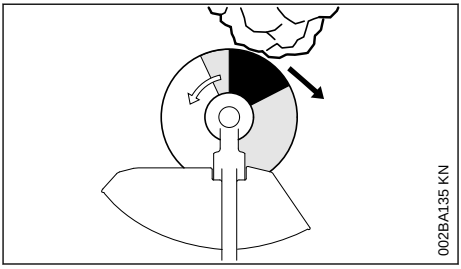

The **risk of kickout is greatest** when the **black area** of the rotating cutting attachment comes into contact with a solid object.

2.17 Grass Cutting Blade

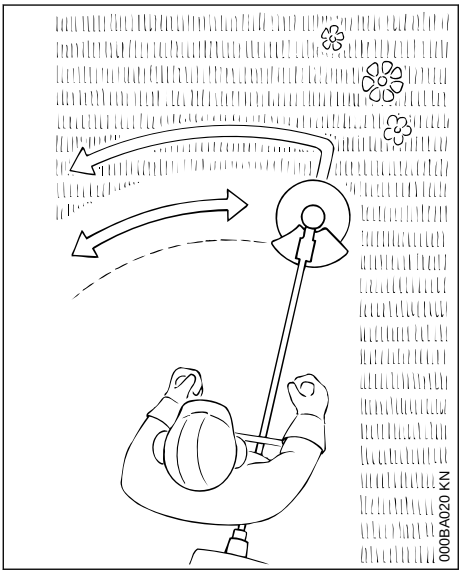

Use for grass and weeds only – sweep the brushcutter in an arc like a scythe.

WARNING

Improper use may damage the grass cutting blade – **risk of injury** from thrown parts.

Resharpen the grass cutting blade according to instructions when it has dulled noticeably.

3 Approved Combinations of Cutting Attachment, Deflector, Handle and Harness

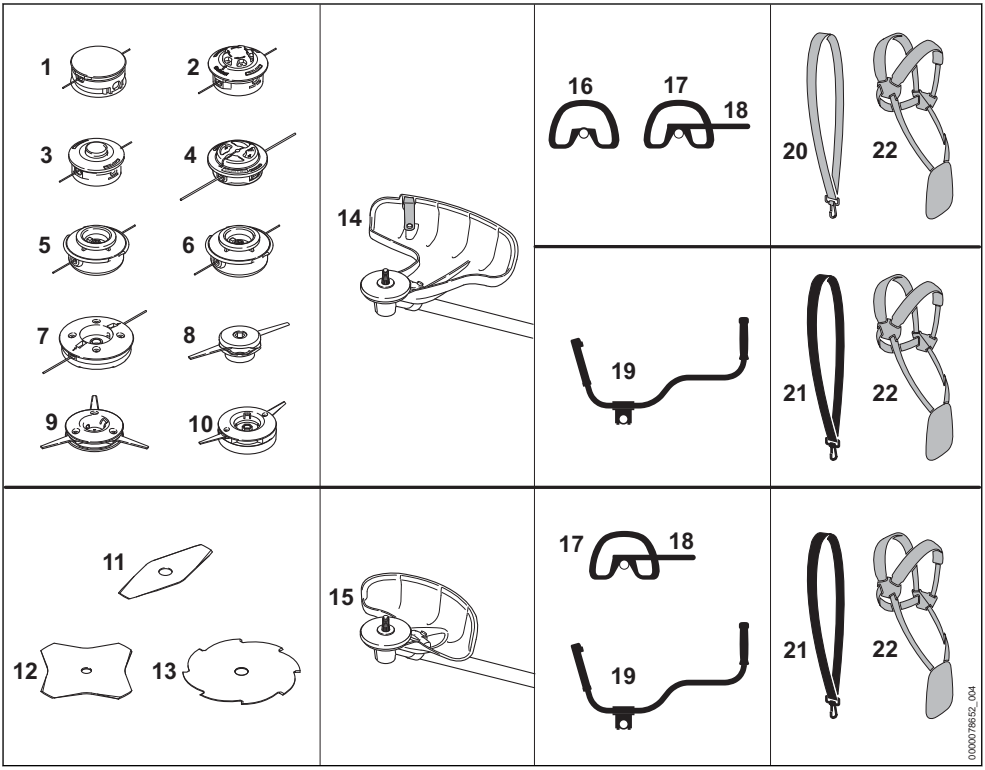

3.1 Permissible combinations

Choose the correct combination from the table depending on the cutting tool!

WARNING

For safety reasons only the cutting attachments, deflector, handle and harness versions within one line of the table may be combined with one another. No other combinations are permitted because of the **risk of accidents**.

3.2 Cutting attachments

3.2.1 Mowing heads

1 STIHL SuperCut 20-2
2 STIHL AutoCut C 25-2
3 STIHL AutoCut 25-2 / AutoCut 27-2
4 STIHL AutoCut C 26-2
5 STIHL TrimCut 31-2
6 STIHL TrimCut 32-2
7 STIHL DuroCut 20-2
8 STIHL PolyCut 18-2
9 STIHL PolyCut 20-3
10 STIHL PolyCut 28-2

3.2.2 Metal cutting tools

11 Grass cutting blade 230-2 (230 mm dia.)
12 Grass cutting blade 230-4 (230 mm dia.)
13 Grass cutting blade 230-8 (230 mm dia.)

WARNING

Grass cutting blades of materials other than metal must not be used.

3.3 Deflectors

14 Guard with blade for mowing heads

15 Deflector for metal cutting attachments

3.4 Handles

16 Loop handle

17 Loop handle with

18 Barrier bar

19 Bike handle

3.5 Shoulder straps

20 Shoulder strap can be used

21 Shoulder strap must be used

22 Full harness can be used

4 Mounting the Bike Handle

4.1 Mounting the Handlebar

Mount the handlebar on the drive tube about 10 cm (4 in) forward of the engine housing.

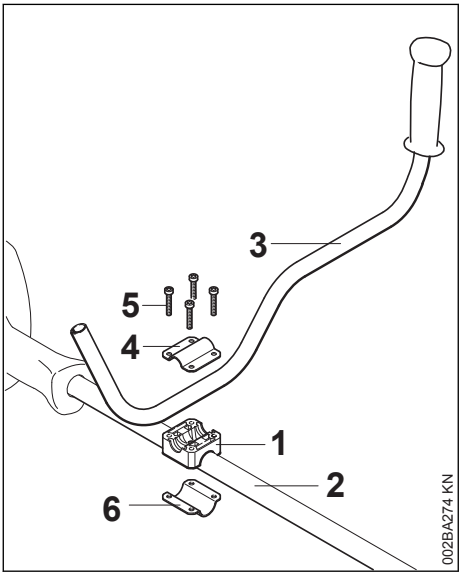

- Place the handle support (1) on the drive tube (2).
- Place the handlebar (3) in the handle support.
- Fit the clamp (4) on the handle support. Insert the screws (5) through the holes in the parts and screw them into clamp (6) as far as stop – tighten them only moderately at this stage.

4.2 Mounting the Control Handle

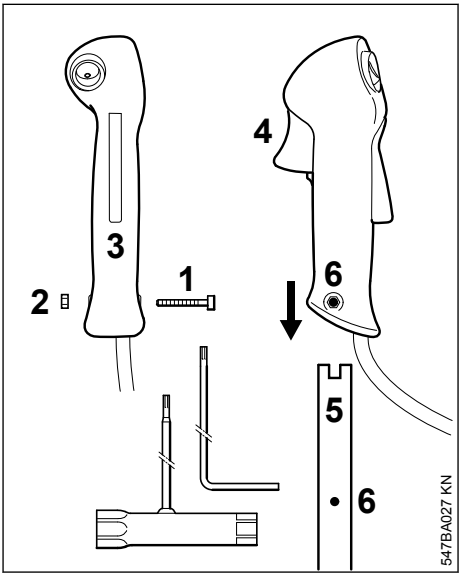

- Take out the screw (1) – the nut (2) remains in the control handle (3).
- Push the control handle onto the handlebar (5) until the holes (6) line up – the throttle trigger (4) must point towards the gearbox.
- Insert the screw (1) and tighten it down firmly.

4.3 Adjusting and securing the handlebar

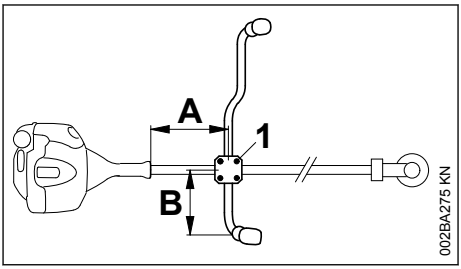

- Align the handlebar so that distance A is about 20 cm (8 in) and distance B about 15 cm (6 in).
- Tighten down the screws (1) firmly in a crosswise pattern.

4.4 Fitting the Throttle Cable

NOTICE

Do not kink the throttle cable or lay it in tight radii – make sure the throttle trigger moves freely.

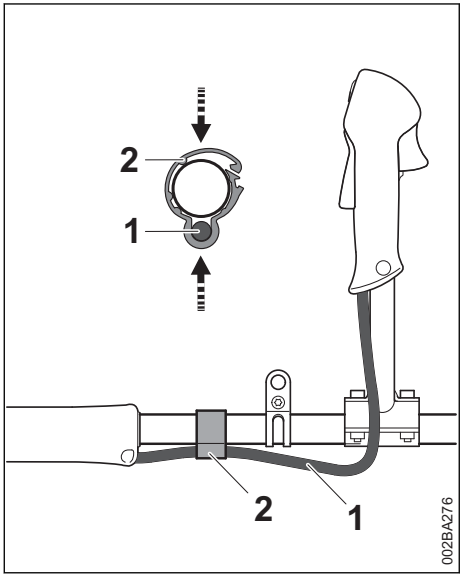

- Position the throttle cable retainer (2) and throttle cable (1) against the drive tube.
- Close the throttle cable retainer (2). The retainer (2) snaps into place.

5 Mounting the Loop Handle

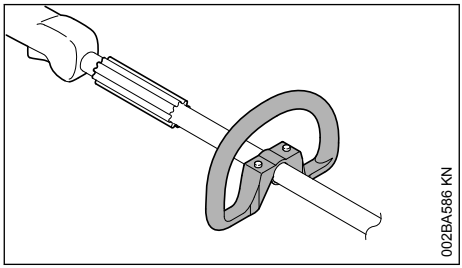

A factory-new machine comes with the loop handle already mounted.

5.1 Using the Barrier Bar

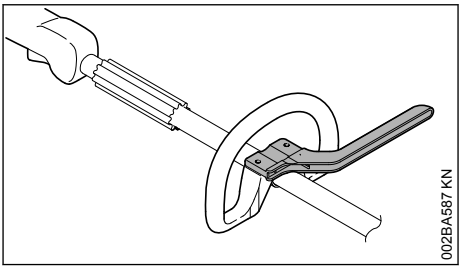

A barrier bar may have to be mounted to suit the cutting attachment you intend to use – see "Approved Combinations of Cutting Attachment, Deflector, Handle and Harness".

The barrier bar comes standard with the machine or is available as a special accessory.

5.2 Mounting the Barrier Bar

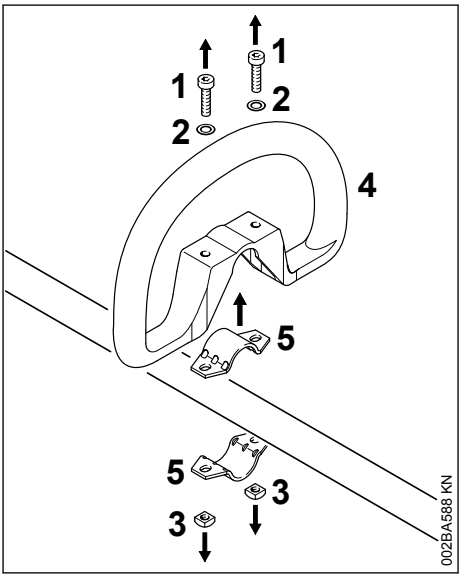

- Take out the screws (1) and remove along with washers (2) and nuts (3).
- Remove the loop handle (4) and clamps (5).

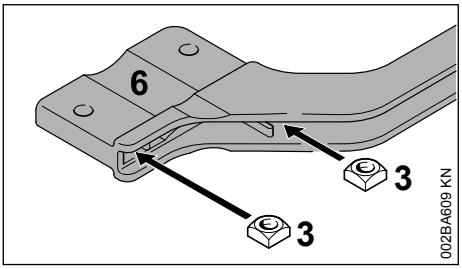

- Fit the square nuts (3) in the barrier bar (6); the holes must line up.

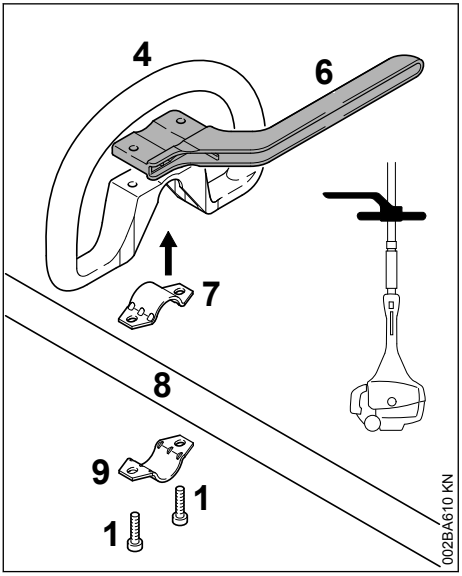

- Place the clamp (7) in the loop handle (4) and position them both against the drive tube (8).
- Position the clamp (8) against the drive tube.
- Place the barrier bar (6) in position as shown.
- Line up the holes.
- Insert the screws (1) in the holes and screw them into the barrier bar as far as stop.
- Go to "Adjusting and Securing the Loop Handle".

Leave the barrier bar permanently mounted to the loop handle.

5.3 Adjusting and Securing the Loop Handle

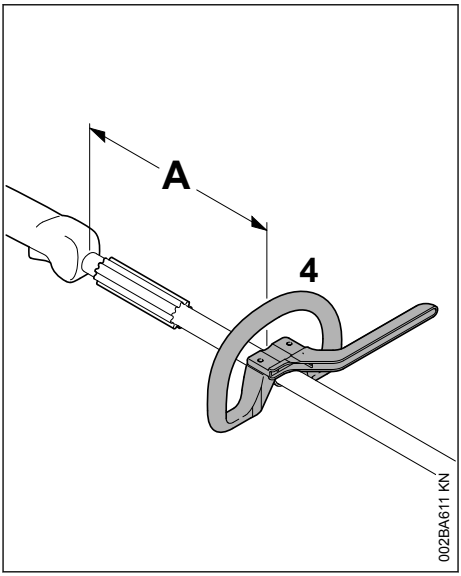

The loop handle can be adjusted to suit the height and reach of the operator and the application by changing distance (A).

Recommendation: distance (A): about 15 cm (5.9 in)

- Slide the handle to the required position.
- Line up the loop handle (4).
- Tighten down the screws until the loop handle can no longer be rotated on the drive tube. If no barrier bar is fitted – lock the nuts if necessary.

6 Fitting the Carrying Ring

6.1 Polymer Version

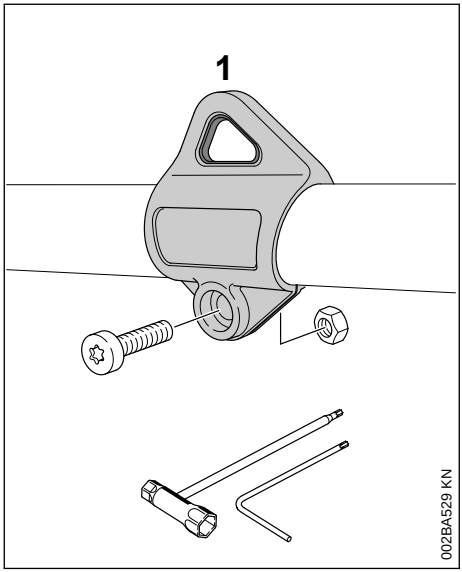

For position of carrying ring see "Main Parts".

- Push the carrying ring (1) over the drive tube.
- Insert the M5 nut in the hex recess in the carrying ring.
- Fit the M5x14 screw.
- Line up the carrying ring.
- Tighten down the screw firmly.

6.2 Metal Version

The carrying ring comes standard with the machine or is available as a special accessory.

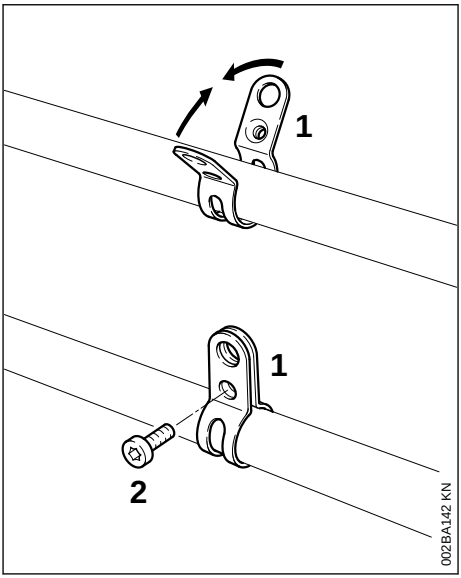

For position of carrying ring see "Main Parts".

- Place the clamp (1) against the drive tube **with the tapped hole on the left** (viewed from engine).
- Squeeze the two ends of the clamp together and hold in that position.
- Insert the M6x14 screw (2).
- Line up the carrying ring.
- Tighten down the screw firmly.

7 Mounting the Deflector

7.1 Use the right deflector

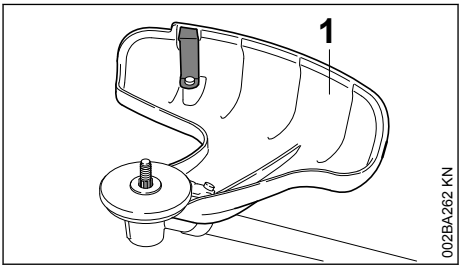

WARNING

Deflector (1) is approved for mowing heads only and must therefore be mounted before fitting a mowing head

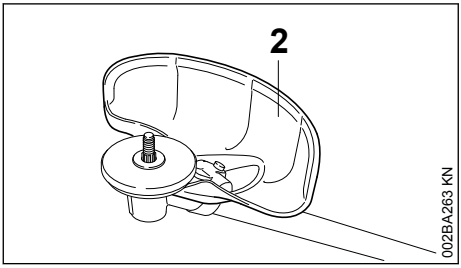

WARNING

Deflector (2) is approved for grass cutting blades only and must therefore be mounted before fitting a grass cutting blade.

7.2 Mounting the Deflector

Deflectors (1) and (2) are both mounted to the gearbox in the same way.

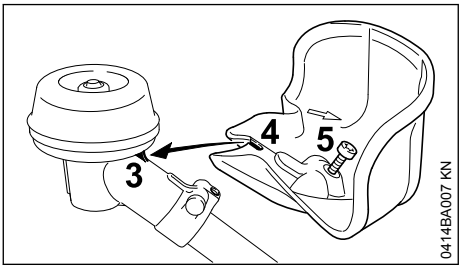

- Position the deflector against the gearbox so that the lug (3) engages the recess (4) in the deflector.
- Insert the screw (5) and tighten it down firmly.

8 Mounting the Cutting Attachment

8.1 Placing power tool on the ground

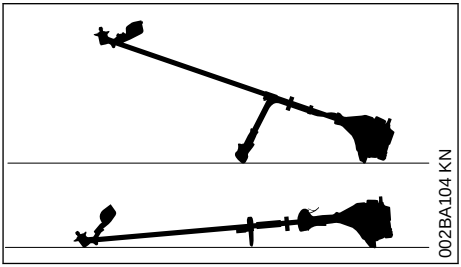

- Shut off the engine.
- Lay your power tool on its back so that the cutting attachment mounting face is pointing up.

8.2 Fitting the Thrust Plate

The machine comes standard with the thrust plate.

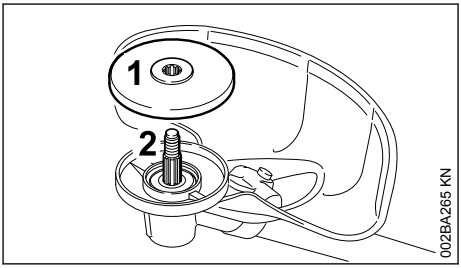

- Slip the thrust plate (1) over the shaft (2).

NOTICE

The thrust plate on the gearbox is necessary for mounting cutting tools.

8.3 Mounting Hardware for Cutting Attachments

The mounting hardware supplied depends on the cutting attachment that comes as original equipment with the new machine.

8.3.1 If mounting hardware is not packed with machine

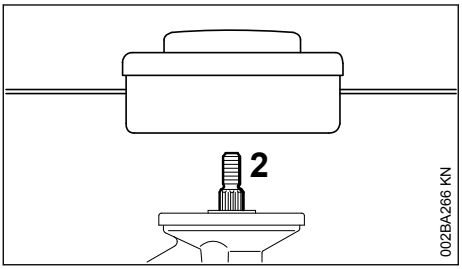

Only mowing heads may be used which mount directly to the shaft (2).

8.3.2 If mounting hardware is packed with machine

Mowing heads and metal cutting tools may be mounted.

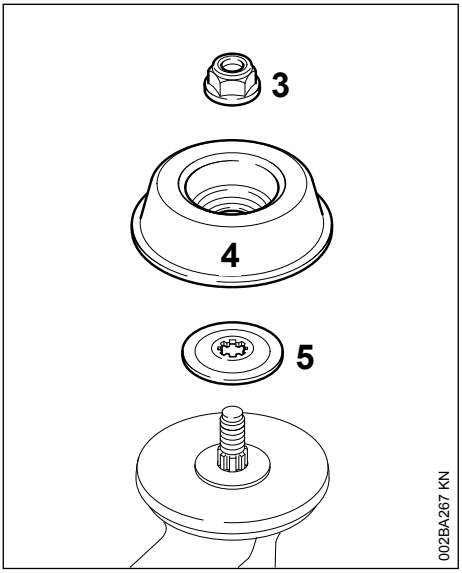

The nut (3), rider plate (4) and thrust washer (5) are required to secure some mowing heads.

These parts are included in a kit supplied with the machine and are also available as special accessories.

8.4 Block the shaft.

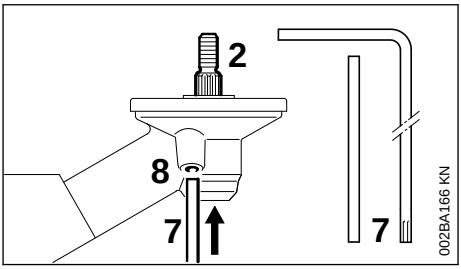

The output shaft (2) must be blocked with the stop pin (7) or screwdriver (7) to mount or remove cutting tools. These parts come standard with the machine or are available as special accessories.

- Insert the stop pin (7) or offset screwdriver (7) in the hole (8) in the gearbox as far as stop – and apply slight pressure.
- Rotate shaft or cutting attachment until the stop pin slips into position and blocks the shaft.

8.5 Mounting the Cutting Attachment

WARNING

Use a deflector that matches the cutting attachment – see "Mounting the Deflector".

8.6 Fitting the mowing head with screw mounting

Keep the supplement sheet for the mowing head in a safe place.

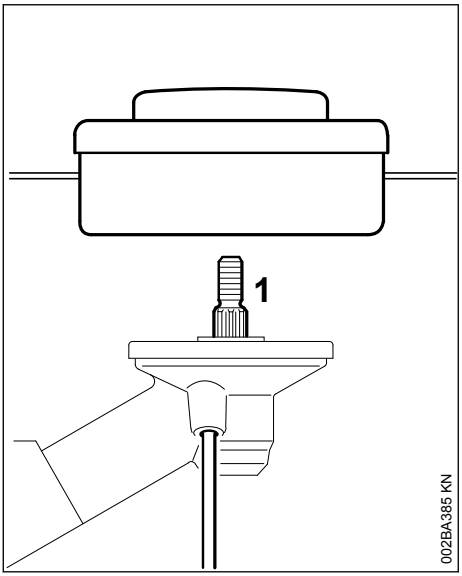

- Fit the thrust plate
- Turn the mowing head anticlockwise on the shaft (1) as far as it will go
- Retain the shaft
- Tighten the mowing head

NOTICE

Remove the tool that was used to block the shaft.

8.7 Removing the Mowing Head

- Retain the shaft
- Turn the mowing head clockwise

8.8 Mounting Metal Cutting Attachment

Keep the leaflet and packaging of the metal cutting tool in a safe place.

WARNING

Wear protective gloves to reduce the risk of direct contact with the sharp cutting edges.

Mount only metal cutting attachments.

Check direction of rotation of cutting attachment

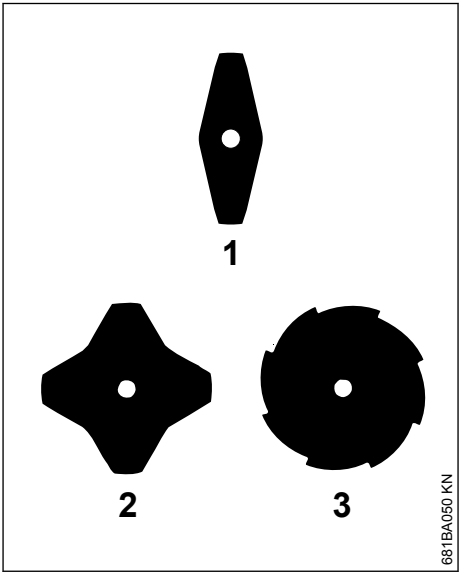

The cutting edges of the grass cutting blades (1) and (2) may point in either direction – these cutting attachments must be turned over regularly to reduce one-sided wear.

Cutting edges of grass cutting blade (3) must point clockwise.

WARNING

Direction of rotation is indicated by an arrow on the inside of the deflector.

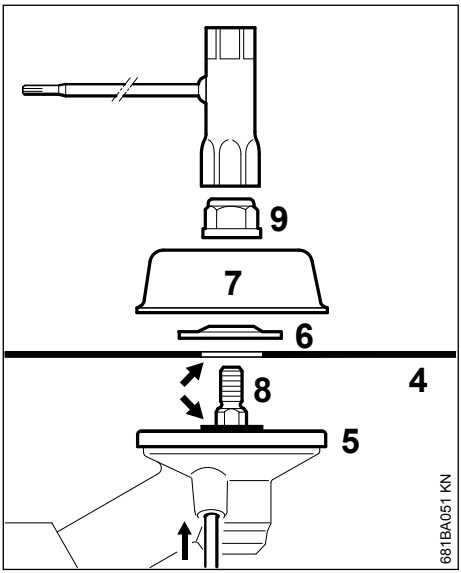

- Place the cutting attachment (4) on the thrust plate (5).

WARNING

Collar (see arrow) must engage the cutting attachment's mounting hole.

Securing the cutting attachment

- Fit the thrust washer (6) – convex side must face up.
- Fit the rider plate (7).
- Block the shaft (8).
- Screw the mounting nut (9) on to the shaft counterclockwise and tighten it down firmly.

WARNING

If the mounting nut has become too loose, fit a new one.

NOTICE

Remove the tool used to block the shaft.

8.9 Removing the Metal Cutting Attachment

WARNING

Wear protective gloves to reduce the risk of direct contact with the sharp cutting edges.

- Block the shaft.
- Unscrew the mounting nut clockwise.
- Remove cutting attachment and its mounting hardware from the gearbox – but **do not** remove the thrust plate (5).

9 Fuel

The engine requires a mixture of gasoline and engine oil.

WARNING

Avoid direct skin contact with fuel and breathing in of gasoline fumes.

9.1 STIHL MotoMix

STIHL recommends using STIHL MotoMix. This pre-blended fuel is free of benzene and lead, is distinguished by a high octane rating, and always provides the proper mixing ratio.

STIHL MotoMix uses STIHL HP Ultra two-stroke engine oil for optimum engine life.

MotoMix is not available in all markets.

9.2 Mixing fuel

NOTICE

Unsuitable fuels or a mixing ratio that deviates from the specification can lead to severe engine damage. The engine, seals, fuel lines and fuel tank may be damaged if low-quality gasoline or engine oil is used.

9.2.1 Gasoline

Use only **high-quality gasoline** with an octane rating of at least 90 ROC – leaded or unleaded.

Gasoline with an alcohol component exceeding 10% can cause impaired engine performance in engines with manually adjustable carburetors and thus should not be used in these engines.

Engines with M-Tronic deliver full engine performance using gasoline with an alcohol component of up to 27% (E27).

9.2.2 Engine oil

If you mix the fuel yourself, use only STIHL two-stroke engine oil or another high-performance engine oil classified as JASO FB, JASO FC, JASO FD, ISO-L-EGB, ISO-L-EGC or ISO-L-EGD.

STIHL specifies STIHL HP Ultra two-stroke engine oil or an equivalent high-performance engine oil in order to maintain emission limits over the machine's service life.

9.2.3 Mixing ratio

with STIHL two-stroke engine oil 1:50; 1:50 = 1 part oil + 50 parts gasoline

9.2.4 Examples

Quantity of gasoline	STIHL two-stroke engine oil 1:50	
Liters	Liters	(ml)
1	0.02	(20)
5	0.10	(100)
10	0.20	(200)
15	0.30	(300)
20	0.40	(400)
25	0.50	(500)

- Pour oil into an approved safety fuel canister first, then add gasoline and mix thoroughly

9.3 Storing fuel mixture

Store in approved safety fuel canisters only in a dry, cool and secure place protected against light and sunlight.

Fuel mixture deteriorates with age – mix only as much as needed for a few weeks. Do not store fuel mixture for longer than 30 days. The fuel mixture can become unusable more quickly if exposed to light, sunlight or low or high temperatures.

STIHL MotoMix however can be stored for up to 5 years without any problems.

- Shake the canister containing the fuel mixture thoroughly before refueling

WARNING

Pressure may have built up in the canister – open it carefully.

- The fuel tank and the canister in which fuel mixture is stored should be cleaned thoroughly from time to time

Residual fuel and the liquid used for cleaning must be disposed of in accordance with regulations and without harming the environment!

10 Fueling

10.1 Preparations

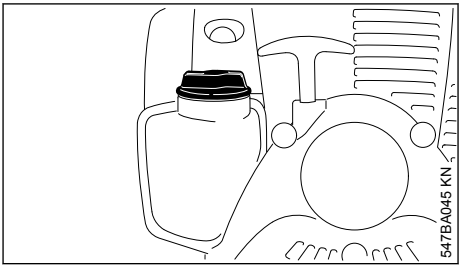

- Before fueling, clean the filler cap and the area around it to ensure that no dirt falls into the tank.
- Position the machine so that the filler cap is facing up.

10.2 Opening the Tank Cap

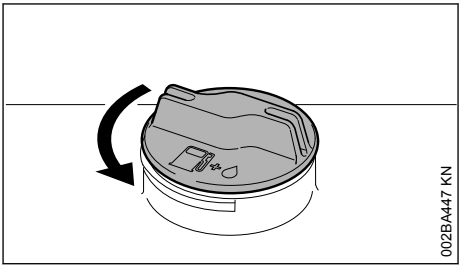

- Turn the cap counterclockwise until it can be removed from the tank opening.
- Remove the tank cap.

10.3 Filling Up with Fuel

Take care not to spill fuel while fueling and do not overfill the tank.

STIHL recommends you use the STIHL filler nozzle for fuel (special accessory).

- Fill up with fuel.

10.4 Closing the Tank Cap

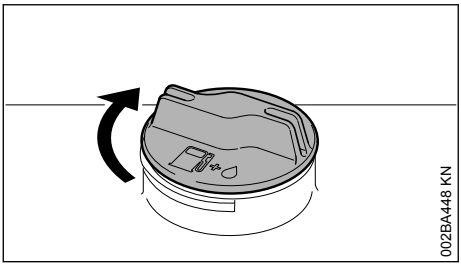

- Place the cap in the opening.
- Turn the cap clockwise as far as stop and tighten it down as firmly as possible by hand.

11 Fitting the Harness

The type and style of the harness depend on the market.

The use of the harness is described in the chapter on "Approved Combinations of Cutting Attachment, Deflector, Handle and Harness".

11.1 Shoulder strap

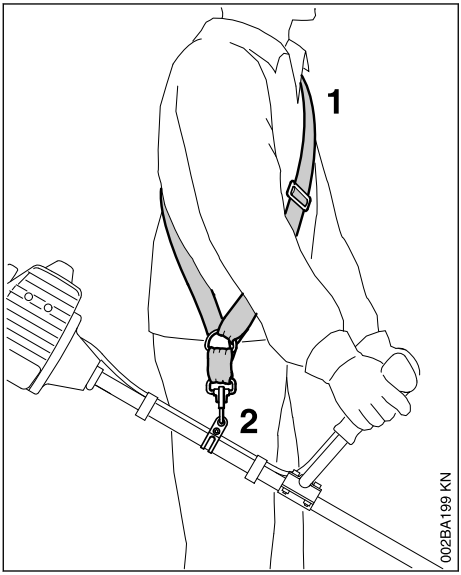

- Put on the shoulder strap (1).
- Adjust the length of the strap so that the carabiner (2) is about a hand’s width below your right hip.
- Balance the machine.

11.2 Full Harness

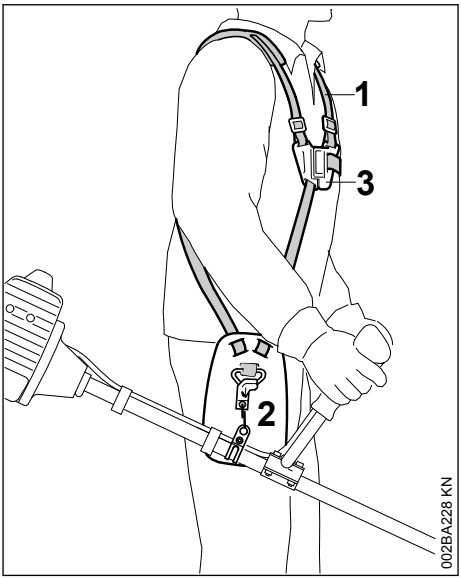

- Put on the harness (1) and close the locking plate (3).
- Adjust the length of the strap – with the machine attached, the carabiner (2) must be about a hand's width below your right hip.
- Balance the machine – see "Balancing the Machine".

12 Balancing the Machine

The type and style of the harness and carabiner (spring hook) depend on the market.

The carrying ring is integrated in the control handle on loop-handled units– see "Main Parts". Loop-handled units do not need to be balanced.

12.1 Attaching the unit to the harness

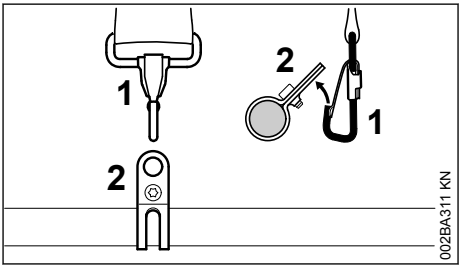

- Attach the carabiner (1) to the carrying ring (2) on the drive tube.

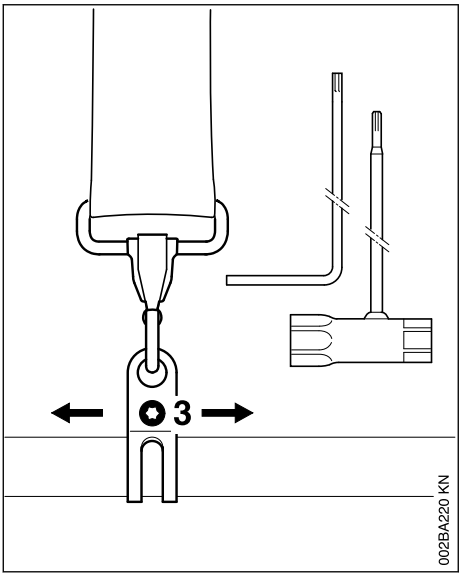

► Loosen the screw (3).

12.2 Floating position

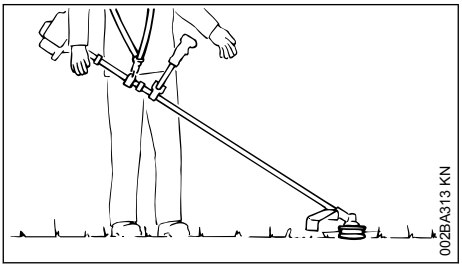

► Mowing heads and grass cutting blades should just touch the ground.

Proceed as follows to adjust the floating position:

► Move the carrying ring up or down the drive tube – tighten the screw moderately – let the unit go and wait until is its balanced – then check the floating position.

When the correct floating position has been reached:

► Tighten down the screw on the carrying ring firmly.

12.3 Detaching the unit from the harness

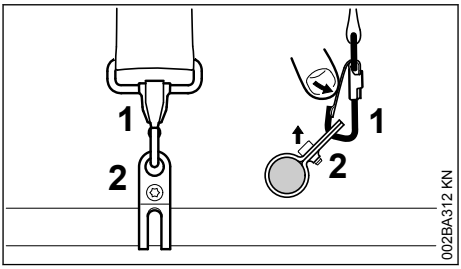

► Press down the bar on the carabiner (1) and pull the carrying ring (2) out of the carabiner.

13 Starting / Stopping the Engine

13.1 Controls

13.1.1 Version with Bike Handle

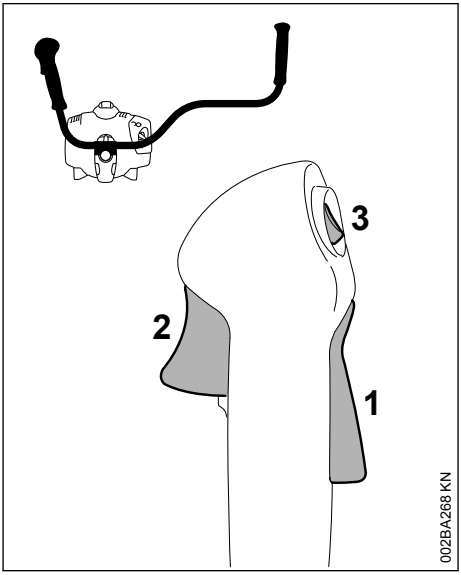

1 Throttle trigger lockout

2 Throttle trigger

3 Stop switch with Run and 0 = Stop positions.

13.1.2 Version with Loop Handle

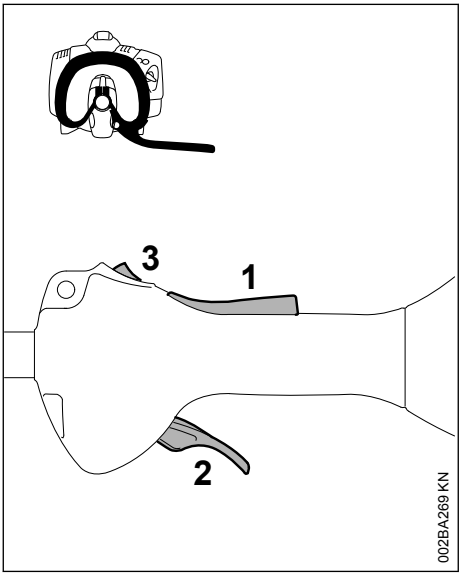

1 Throttle trigger lockout
2 Throttle trigger
3 Stop switch with Run and 0 = Stop positions.

13.1.3 Function of stop switch and ignition system

The stop switch is normally in the Run position, i.e. when it is not depressed: The ignition is switched on – the engine is ready to start. If the stop switch is moved to the **0** position, the ignition is switched off. The ignition is switched on again automatically after the engine stops.

13.2 Starting the Engine

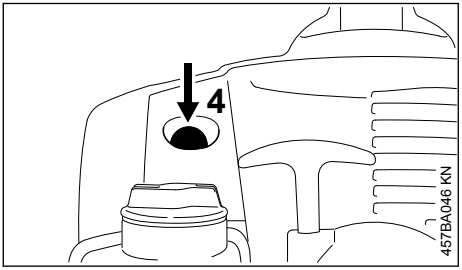

- Press the manual fuel pump bulb (4) at least five times – even if the bulb is filled with fuel.

13.2.1 Cold engine (cold start)

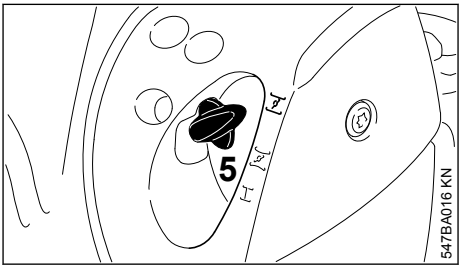

- Press in the choke lever (5) and turn it to ⅊ at the same time.

13.2.2 Warm engine (warm start)

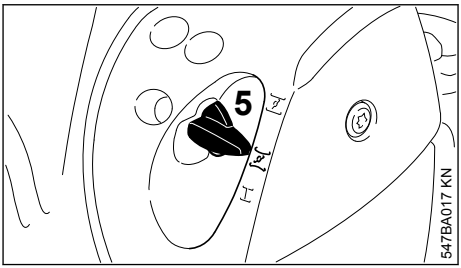

- Press in the choke lever (5) and turn it to ⅊ at the same time.

Also use this setting if the engine has been running but is still cold.

13.2.3 Cranking

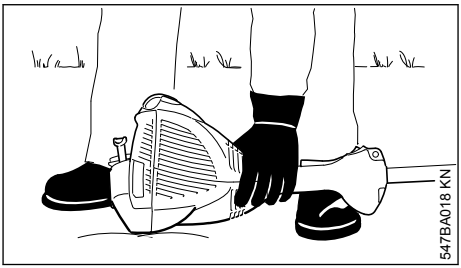

- Place the unit on the ground: It must rest securely on the engine support and the deflector.
- If fitted: Remove the transport guard from the cutting attachment.

To reduce the risk of accidents, check that the cutting attachment is not touching the ground of any other obstacles.

- Make sure you have a firm footing, either standing, stooping or kneeling.

- Hold the unit **firmly** on the ground with your left hand and press down – do not touch the throttle trigger, lockout lever or stop switch.

NOTICE

Do not stand or kneel on the drive tube.

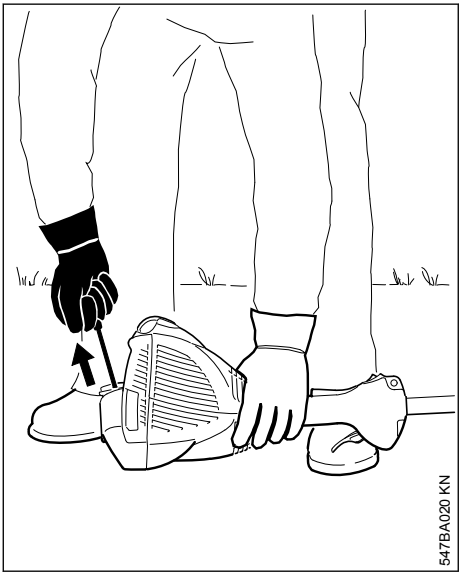

- Hold the starter grip with your right hand.

13.2.4 Version without ErgoStart

- Pull the starter grip slowly until you feel it engage and then give it a brisk strong pull.

13.2.5 Version with ErgoStart

- Pull the starter grip steadily.

NOTICE

Do not pull out the starter rope all the way – **it might otherwise break**.

- Do not let the starter grip snap back. Guide it slowly back into the housing so that the starter rope can rewind properly.
- Continue cranking until the engine runs.

13.2.6 As soon as the engine runs

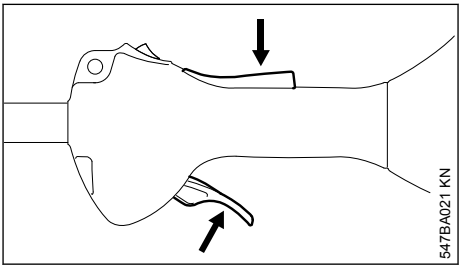

- Press down the throttle trigger lockout and open the throttle – the choke lever moves to the run position I. After a cold start, warm up the engine by opening the throttle several times.

WARNING

Make sure the carburetor is correctly adjusted. The cutting attachment must not rotate when the engine is idling.

Your machine is now ready for operation.

13.3 Stopping the Engine

- Move the stop switch in the direction of **0** – the engine stops – release the stop switch – it springs back to the run position.

13.4 Other Hints on Starting

Engine stalls in cold start position ⌶ or under acceleration

- Move the choke knob to ⌶ and continue cranking until the engine runs.

Engine does not start in warm start position ⌶

- Move the choke knob to ⌶ and continue cranking until the engine runs.

If the engine does not start

- Check that all settings are correct.
- Check that there is fuel in the tank and refuel if necessary.
- Check that the spark plug boot is properly connected.
- Repeat the starting procedure.

Engine is flooded

- Move the choke knob to I and continue cranking until the engine runs.

Fuel tank run until completely dry

- After refueling, press the manual fuel pump bulb at least five times – even if the bulb is filled with fuel.

- Set the choke lever to suit the engine temperature.
- Now start the engine.

14 Transporting the Unit

14.1 Using transport guard

The type of transport guard depends on the metal cutting attachment supplied with the machine. Transport guards are available as special accessories.

14.1.1 230 mm Grass Cutting Blades

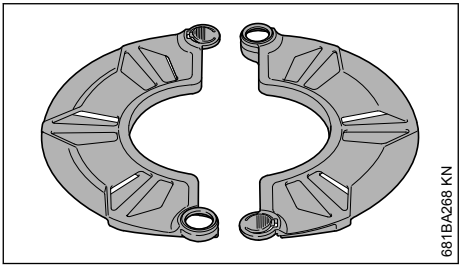

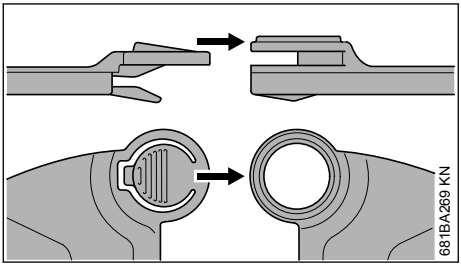

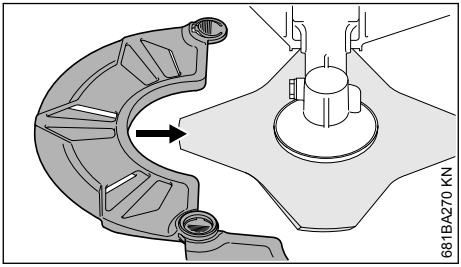

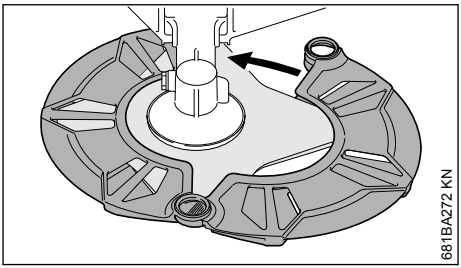

15 Operating Instructions

15.1 During break-in period

A factory-new machine should not be run at high revs (full throttle off load) for the first three tank fillings. This avoids unnecessary high loads during the break-in period. As all moving parts have to bed in during the break-in period, the frictional resistances in the engine are greater during this period. The engine develops its maximum power after about 5 to 15 tank fillings.

15.2 During Operation

After a long period of full throttle operation, allow the engine to run for a short while at idle speed so that engine heat can be dissipated by the flow of cooling air. This protects engine-mounted components (ignition, carburetor) from thermal overload.

15.3 After Finishing Work

Storing for a short period: Wait for the engine to cool down. Empty the fuel tank and keep the machine in a dry place, well away from sources of ignition, until you need it again. For longer out-of-service periods – see "Storing the Machine".

16 Cleaning the Air Filter

16.1 If there is a noticeable loss of engine power

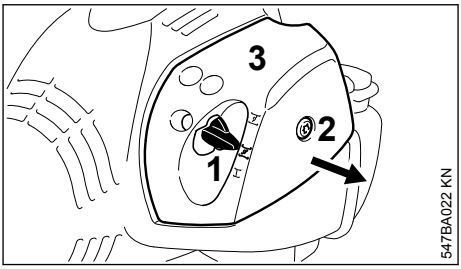

- Move the choke lever (1) to .

- Turn the screw (2) in the filter cover (3) counterclockwise until the cover is loose.
- Ease the filter cover (3) over the choke lever and lift it away.
- Clean away loose dirt from around the filter.

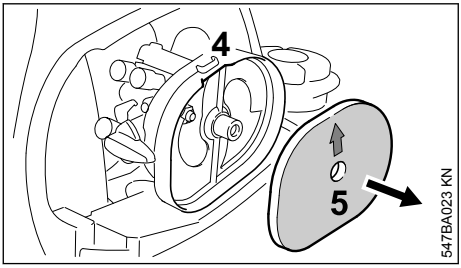

- Reach into the recess (4) in the filter housing and take out the felt filter (5).
- Fit a new felt filter element (5). As a temporary measure you can knock it out on the palm of your hand or blow it out with compressed air. Do not wash.

NOTICE

Replace damaged parts.

- Fit the felt filter (5) in the filter housing, make sure it is properly seated – the arrow points to the recess.
- Move the choke lever (1) to ⌶.
- Fit the filter cover in position, making sure the screw is square. Tighten down the screw.

17 Adjusting the Carburetor

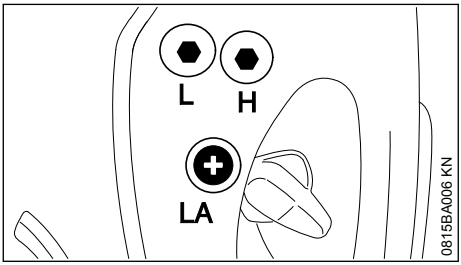

The carburetor has been set at the factory to provide an optimum fuel-air mixture under most operating conditions.

17.1 Adjusting Idle Speed

Engine stops while idling

- Warm up the engine for about 3 minutes.
- Turn the idle speed screw (LA) slowly clockwise until the engine runs smoothly – the cutting attachment must not run.

Cutting attachment runs when engine is idling

- Turn the idle speed screw (LA) counterclockwise until the cutting attachment stops moving and then rotate the screw another 1/2 to 3/4 turn in the same direction.

WARNING

If the cutting attachment continues to run when the engine is idling, have your machine checked and repaired by your servicing dealer.

18 Spark Plug

- If the engine is down on power, difficult to start or runs poorly at idle speed, first check the spark plug.
- Fit a new spark plug after about 100 operating hours – or sooner if the electrodes are badly eroded. Install only suppressed spark plugs of the type approved by STIHL – see "Specifications".

18.1 Removing the Spark Plug

- Shut off the engine.

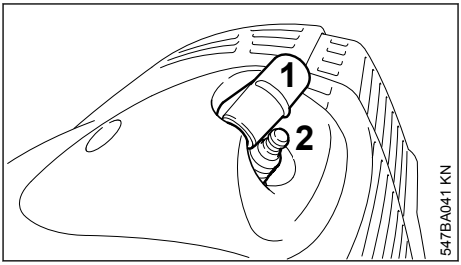

- Remove the spark plug boot (1).
- Unscrew the spark plug (2).

18.2 Checking the Spark Plug

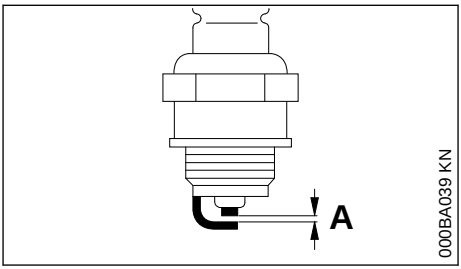

- Clean dirty spark plug.
- Check electrode gap (A) and readjust if necessary – see "Specifications".
- Rectify the problems which have caused fouling of the spark plug.

Possible causes are:
– Too much oil in fuel mix.
– Dirty air filter.
– Unfavorable running conditions.

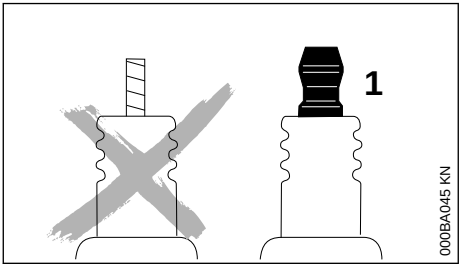

WARNING

Arcing may occur if the adapter nut (1) is loose or missing. Working in an easily combustible or explosive atmosphere may cause a fire or an explosion. This can result result in serious injuries or damage to property.

- Use resistor type spark plugs with a properly tightened adapter nut.

18.3 Installing the Spark Plug

- Screw the spark plug into the cylinder.
- Press the boot firmly onto the spark plug.

19 Engine Running Behavior

If engine running behavior is unsatisfactory even though the air filter is clean and the carburetor is properly adjusted, the cause may be the muffler.

Have the muffler checked for contamination (carbonization) by your servicing dealer.

STIHL recommends that you have servicing and repair work carried out exclusively by an authorized STIHL servicing dealer.

20 Storing the Machine

If out of use for periods of about 30 days or longer

- Drain and clean the fuel tank in a well ventilated area.
- Dispose of fuel properly in accordance with local environmental requirements.
- If a manual fuel pump is fitted: Press the manual fuel pump at least 5 times.
- Start the engine and run it at idling speed until it stops.
- Remove, clean and inspect the cutting attachment. Coat metal cutting attachments with corrosion inhibitor.
- Thoroughly clean the machine – pay special attention to the cylinder fins and air filter.
- Store the machine in a dry and secure location – out of the reach of children and other unauthorized persons.

21 Sharpening Metal Cutting Blades

- Use a sharpening file (special accessory) to sharpen dull cutting attachments. In case of more serious wear or nicks: Resharpen with a grinder or have the work done by a dealer – STIHL recommends a STIHL servicing dealer.
- Sharpen frequently, take away as little metal as possible – two or three strokes of the file are usually enough.

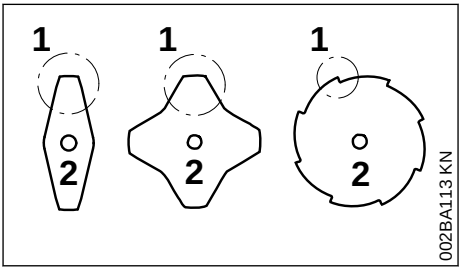

- Resharpen the teeth (1) uniformly – do not alter the contour of the parent blade (2) in any way.

See cutting attachment packaging for additional sharpening instructions. Keep the packaging for future reference.

21.1 Balancing

- After resharpening about 5 times, check the cutting attachment for out-of-balance on a STIHL balancer (special accessory) or have it checked by a dealer and re-balanced as necessary – STIHL recommends a STIHL servicing dealer.

22 Maintaining the Mowing Head

22.1 Placing power tool on the ground

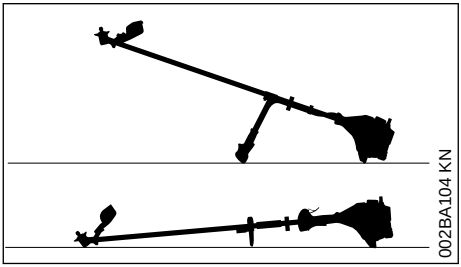

- Shut off the engine.
- Lay your power tool on its back so that the cutting attachment mounting face is pointing up.

22.2 Replacing Nylon Line

Always check the mowing head for signs of wear before replacing the nylon line.

WARNING

If there are signs of serious wear, replace the complete mowing head.

The nylon mowing line is referred to as "nylon line" or "line" in the following.

The mowing head is supplied with illustrated instructions for replacing the nylon line. Keep the instructions for the mowing head in a safe place.

- If necessary, remove the mowing head.

22.3 Adjusting Nylon Line

STIHL SuperCut

Fresh line is advanced automatically if the remaining line is **at least 6 cm (2 1/2 in)** long. The blade on the deflector trims overlong lines to the correct length.

STIHL AutoCut

- With the engine running, hold the rotating mowing head above the grass surface.
- Tap it on the ground once – fresh line is advanced and the blade on the deflector trims it to the right length.

Fresh line is advanced every time the mowing head is tapped on the ground. For this reason observe the mowing head's cutting performance during operation. If the mowing head is tapped on the ground too often, the line limiting blade will unnecessarily cut off unused lengths of nylon line.

Line feed operates only if both lines are still at least **2.5 cm (1 in)** long.

STIHL TrimCut

WARNING

To reduce the risk of injury, always shut off the engine before adjusting the nylon line by hand.

- Pull the spool up – rotate it about 1/6 turn counterclockwise until it engages – and allow it to spring back.
- Pull ends of the lines outward.

Repeat the above procedure as necessary until both lines reach the limiter blade on the deflector.

Rotating the spool from one stop to the next advances about **4 cm (1 1/2 in)** of fresh line.

22.4 Replacing Nylon Line

STIHL PolyCut

Precut lengths of nylon line can be fitted to the PolyCut in place of the cutting blades.

STIHL DuroCut, STIHL PolyCut

WARNING

To reduce the risk of injury, always shut off the engine before refilling the mowing head.

- Fit precut lengths of nylon line in the mowing head as described in the instructions supplied.

22.5 Replacing Cutting Blades

22.5.1 STIHL PolyCut

Always check the mowing head for signs of wear before installing new cutting blades.

WARNING

If there are signs of serious wear, replace the complete mowing head.

The thermoplastic cutting blades are referred to as "blades" in the following.

The mowing head is supplied with illustrated instructions for replacing the blades. Keep the instructions for the mowing head in a safe place.

WARNING

To reduce the risk of injury, always shut off the engine before installing the blades.

- Remove the mowing head.
- Replace blades as shown in the illustrated instructions.
- Mount the mowing head on the machine.

23 Maintenance and Care

The following intervals apply to normal operating conditions only. If your daily working time is longer or operating conditions are difficult (very dusty work area, etc.), shorten the specified intervals accordingly.		before starting work	after finishing work or daily	after each refueling stop	weekly	monthly	every 12 months	if problem	if damaged	as required
Complete machine	Visual inspection (condition, leaks)	X		X						
	Clean		X							
	Replace any damaged parts	X							X	
Control handle	Check operation	X		X						
Air filter	Visual inspection					X		X		
	Clean							X		X
	Replace								X	
Manual fuel pump (if fitted)	Check	X								
	Have repaired by servicing dealer[1)]								X	
Pickup body in fuel tank	Check							X		
	Replace						X		X	X
Fuel tank	Clean							X		X
Carburetor	Check idle adjustment – the cutting attachment must not run	X		X						
	Adjust idle speed									X
Spark plug	Readjust electrode gap							X		
	Replace after every 100 operating hours									
Cooling inlets	Visual inspection		X							
	Clean									X
All accessible screws and nuts (not adjusting screws)	Retighten									X
Cutting attachment	Visual inspection	X		X						
	Replace								X	
	Check tightness	X		X						
Metal cutting attachment	Sharpen	X								X
Safety labels	Replace								X	

[1)] STIHL recommends an authorized STIHL servicing dealer.

24 Minimize Wear and Avoid Damage

Observing the instructions in this manual helps reduce the risk of unnecessary wear and damage to the power tool.

The power tool must be operated, maintained and stored with the due care and attention described in this owner's manual.

The user is responsible for all damage caused by non-observance of the safety precautions, operating and maintenance instructions in this manual. This includes in particular:
– Alterations or modifications to the product not approved by STIHL.
– Using tools or accessories which are neither approved or suitable for the product or are of a poor quality.
– Using the product for purposes for which it was not designed.
– Using the product for sports or competitive events.
– Consequential damage caused by continuing to use the product with defective components.

24.1 Maintenance Work

All the operations described in the "Maintenance Chart" must be performed on a regular basis. If these maintenance operations cannot be performed by the owner, they should be performed by a servicing dealer.

STIHL recommends that you have servicing and repair work carried out exclusively by an authorized STIHL servicing dealer. STIHL dealers are regularly given the opportunity to attend training courses and are supplied with the necessary technical information.

If these maintenance operations are not carried out as specified, the user assumes responsibility for any damage that may occur. Among other parts, this includes:
– Damage to the engine due to neglect or deficient maintenance (e.g. air and fuel filters), incorrect carburetor adjustment or inadequate cleaning of cooling air inlets (intake ports, cylinder fins).
– Corrosion and other consequential damage resulting from improper storage.
– Damage to the machine resulting from the use of poor quality replacement parts.

24.2 Parts Subject to Wear and Tear

Some parts of the power tool are subject to normal wear and tear even during regular operation in accordance with instructions and, depending on the type and duration of use, have to be replaced in good time. Among other parts, this includes:
– Cutting attachments (all types)
– Mounting hardware for cutting attachments (rider plate, nut, etc.)
– Deflectors for cutting attachments
– Clutch
– Filters (air, fuel)
– Rewind starter
– Spark plug

25 Main Parts

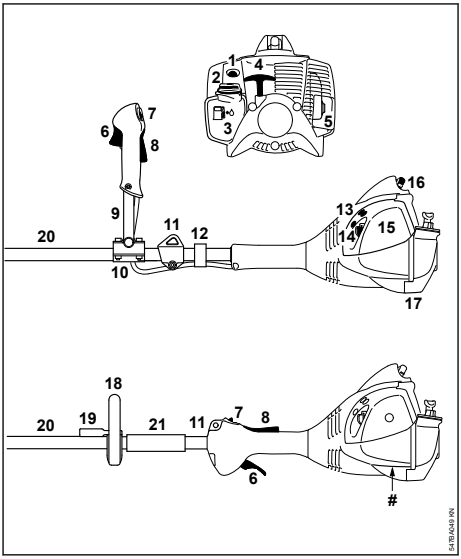

1 Manual fuel pump
2 Tank cap
3 Tank
4 Starter grip
5 Muffler
6 Throttle trigger
7 Stop switch
8 Throttle trigger lockout
9 Bike handle (handlebar)
10 Handle support
11 Carrying ring

12 Throttle cable retainer
13 Carburetor adjusting screws
14 Choke lever
15 Air filter cover
16 Spark plug boot
17 Machine support
18 Loop handle
19 Barrier bar (country specific)
20 Drive tube
21 Sleeve
Serial number

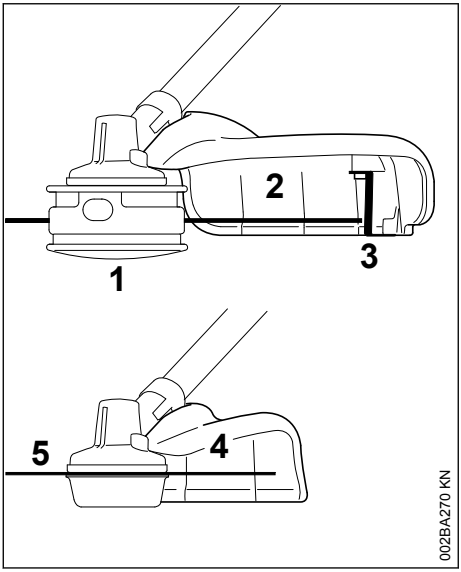

1 Mowing head
2 Deflector for mowing heads only
3 Blade
4 Deflector for grass cutting blades only
5 Grass cutting blade

26 Specifications

26.1 Engine

Single-cylinder two-stroke engine

Displacement:	27.2cm^3
Cylinder bore:	34 mm
Piston stroke:	30 mm
Engine power:	0.85 kW (1.2 hp) at 8500 rpm
Idle speed:	2800 rpm
Cut-off speed (nominal value):	10000 rpm
Max. output shaft speed (cutting tool holder):	8600 rpm

26.2 Ignition system

Electronic magneto ignition

Spark plug (suppressed):	NGK CMR 6 H, BOSCH USR 4AC
Electrode gap:	0.5 mm

26.3 Fuel system

All-position diaphragm carburetor with integral fuel pump

Fuel tank capacity: 340 cm^3 (0.34 l)

26.4 Weight

Dry, without cutting attachment and deflector

FS 56:		5.1 kg
FS 56 R:		4.7 kg
FS 56 C	with ErgoStart:	5.2 kg
FS 56 RC	with ErgoStart:	4.8 kg

26.5 Sound and vibration values

The idle speed and nominal maximum speed are equally taken into account when calculating the sound and vibration levels.

For further details on compliance with Vibration Directive 2002/44/EC, see

www.stihl.com/vib

26.5.1 Sound pressure level L_{peq} according to ISO 22868, uncertainty K: 2 dB(A)

FS 56, FS 56 C

with mowing head:	93 dB(A)
with metal tool:	94 dB(A)

FS 56 R, FS 56 RC

with mowing head:	93 dB(A)
with metal tool:	94 dB(A)

26.5.2 Sound power level L_{weq} according to ISO 22868, uncertainty K: 2 dB(A)

FS 56, FS 56 C, FS 56 R, FS 56 RC

with mowing head:	105 dB(A)
with metal tool:	104 dB(A)

26.5.3 Guaranteed sound power level L_{WAd} measured according to 2000/14/EC

FS 56, FS 56 C, FS 56 R, FS 56 RC

112 dB(A)

26.5.4 Vibration value $a_{hv,eq}$ according to ISO 22867, uncertainty K_a: 2.0 m/s²

FS 56, FS 56 C

	Handle, left	Handle, right
with mowing head:	7.2 m/s²	4.0 m/s²
with metal tool:	6.3 m/s²	5.4 m/s²

FS 56 R

	Handle, left	Handle, right
with mowing head:	6.4 m/s²	6.5 m/s²
with metal tool:	6.3 m/s²	5.7 m/s²

FS 56 RC

	Handle, left	Handle, right
with mowing head:	6.4 m/s²	6.5 m/s²
with metal tool:	6.3 m/s²	5.7 m/s²

26.5.5 Vibration value p_F according to EN ISO 5349-3

FS 56, FS 56 C

	Handle, left	Handle, right
with mowing head	88 m/s²	60 m/s²
with metal mowing tool	57 m/s²	65 m/s²

FS 56 RC

	Handle, left	Handle, right
with mowing head	191 m/s²	131 m/s²
with metal mowing tool	103 m/s²	132 m/s²

26.5.6 Uncertainty K_p according to EN ISO 5349-3

FS 56, FS 56 C:	28 m/s²
FS 56 RC:	43 m/s²

26.6 REACH

REACH is an EC regulation and stands for the Registration, Evaluation, Authorization and Restriction of Chemical substances.

For information on compliance with the REACH regulation (EC) No. 1907/2006 see

www.stihl.com/reach

26.7 Exhaust Emissions

The CO_2 value measured in the EU type approval procedure is specified at

www.stihl.com/co2

in the product-specific technical data.

The measured CO_2 value was determined on a representative engine in accordance with a standardized test procedure under laboratory conditions and does not represent either an explicit or implied guarantee of the performance of a specific engine.

The applicable exhaust emission requirements are fulfilled by the intended usage and maintenance described in this User Manual. The operating license shall be void if the engine is modified in any way.

27 Maintenance and Repairs

Users of this machine may only carry out the maintenance and service work described in this user manual. All other repairs must be carried out by a servicing dealer.

STIHL recommends that you have servicing and repair work carried out exclusively by an authorized STIHL servicing dealer. STIHL dealers are regularly given the opportunity to attend training courses and are supplied with the necessary technical information.

When repairing the machine, only use replacement parts which have been approved by STIHL for this power tool or are technically identical. Only use high-quality replacement parts in order to avoid the risk of accidents and damage to the machine.

STIHL recommends the use of original STIHL replacement parts.

Original STIHL parts can be identified by the STIHL part number, the STIHL® logo and the STIHL parts symbol (the symbol may appear alone on small parts).

28 Disposal

Contact the local authorities or your STIHL servicing dealer for information on disposal.

Improper disposal can be harmful to health and pollute the environment.

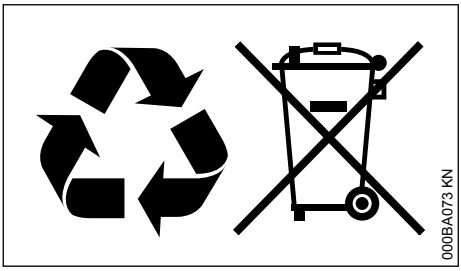

- Take STIHL products including packaging to a suitable collection point for recycling in accordance with local regulations.
- Do not dispose with domestic waste.

29 EU conformity

The EU Declaration of Conformity is available at stihl.link/compliance.

Further information and a form for reporting security vulnerabilities are available at vdp.stihl.com.

CE

30 Addresses

www.stihl.com

0458-547-0121-F

www.stihl.com

0458-547-0121-F