BT 131

STIHL

2 - 20 Instruction Manual

Contents

1 Introduction..... 2
2 Guide to Using this Manual.....2
3 Safety Precautions and Working Techniques..... 2
4 Assembling the Unit..... 7
5 Adjusting the Throttle Cable.....7
6 Fuel..... 7
7 Fueling..... 8
8 Auger Brake..... 9
9 Fitting the Auger.....10
10 Starting / Stopping the Engine..... 11
11 Operating Instructions..... 13
12 Releasing a Trapped Auger..... 13
13 Replacing the Air Filter.....14
14 Adjusting the Carburetor..... 14
15 Spark Plug..... 14
16 Engine Running Behavior..... 15
17 Lubricating the Gearbox.....15
18 Storing the Machine..... 16
19 Maintenance and Care.....16
20 Main Parts.....18
21 Specifications.....18
22 Maintenance and Repairs..... 19
23 Disposal..... 19
24 EC Declaration of Conformity..... 20

1 Introduction

Dear Customer,

Thank you for choosing a quality engineered STIHL product.

It has been built using modern production techniques and comprehensive quality assurance. Every effort has been made to ensure your satisfaction and trouble-free use of the product.

Please contact your dealer or our sales company if you have any queries concerning this product.

Your

Dr. Nikolas Stihl

2 Guide to Using this Manual

2.1 Pictograms

The meanings of the pictograms attached to the machine are explained in this manual.

Depending on the model concerned, the following pictograms may be attached to your machine.

Fuel tank; fuel mixture of gasoline and engine oil

Operate manual fuel pump

Auger brake

2.2 Symbols in text

Warning where there is a risk of an accident or personal injury or serious damage to property.

NOTICE

Caution where there is a risk of damaging the machine or its individual components.

2.3 Engineering improvements

STIHL's philosophy is to continually improve all of its products. For this reason we may modify the design, engineering and appearance of our products periodically.

Therefore, some changes, modifications and improvements may not be covered in this manual.

3 Safety Precautions and Working Techniques

Special safety precautions must be observed when working with this power tool because of its high torque and the high speed of the auger bit in certain applications, and because the auger bits have sharp edges.

It is important you read and understand the instructions for use before first use and keep it in a safe place for future reference. Non-compliance with the User Manual may cause serious or even fatal injury.

Observe all applicable local safety regulations, e.g. by trade organizations, social insurance institutions, labor safety authorities etc.

If you have never used a power tool before: Have your dealer or other experienced user show you how to operate your machine – or attend a special course to learn how to operate it.

Original Instruction Manual
0000007625_009_GB

Printed on chlorine-free paper
Paper is recyclable.

© ANDREAS STIHL AG & Co. KG 2025
0458-529-8321-C. VA1.J25.

Minors are not allowed to work with the power tool – except adolescents above 16 years of age who are instructed under supervision.

Children, animals and bystanders must not be allowed near the machine.

When not using the machine, it must be laid down in such a way that it does not endanger anyone. Ensure that the machine cannot be used without authorization.

The user is responsible for accidents or risks involving third parties or their property.

Do not lend or rent your power tool without the User Manual. Be sure that anyone using it understands the information contained in this manual.

The use of machines that emit noise may be limited to certain hours of the day as specified by national and/or regional or local regulations.

Anyone operating the machine must be well rested, in good physical health and in good mental condition.

If you have any condition that might be aggravated by strenuous work, check with your doctor before operating a machine.

If you have a pacemaker: The ignition system of your machine produces an electromagnetic field of very low intensity. This field may interfere with some pacemakers. STIHL recommends that persons with pacemakers consult their physician and the pacemaker manufacturer to reduce any health risk.

Anyone who has consumed alcohol or drugs or medicines affecting their ability to react must not operate a power tool.

Use your power tool only for drilling holes in soil, ice and wood – depending on the drilling tool mounted. Select the drill axis so that the lever of the drill brake can be supported on the thigh of the operator at any time during drilling.

It must not be used for any other purposes.

Before drilling, make sure that there are no lines (e. g. for gas, water, electricity) at the drilling sites:
- Obtain information from the local utility companies
- If in doubt, check the existence of lines with detectors or test excavations

Only use augers or accessories which have been approved by STIHL for this machine or which are technically equivalent. If you have any questions in this respect, consult your dealer. Use only high quality parts and accessories. in order to avoid the risk of accidents and damage to the machine.

STIHL recommends the use of original STIHL tools and accessories. They are specifically designed to match the product and meet your performance requirements.

Never attempt to modify your power tool in any way since this may increase the risk of personal injury. STIHL excludes all liability for personal injury and damage to property caused while using unauthorized attachments.

Do not use a high-pressure washer to clean the power tool. The solid jet of water may damage parts of the unit.

3.1 Clothing and equipment

Wear proper protective clothing and equipment.

Clothing must be sturdy but allow complete freedom of movement. Wear close-fitting clothes such as a boiler suit, not a loose jacket.

Do not wear clothing which could become trapped in wood, brush or moving parts of the machine. Do not wear a scarf, necktie or jewelry.

Tie up and confine long hair above your shoulders.

Wear sturdy shoes with non-slip soles.

WARNING

To reduce the risk of eye injuries, wear close-fitting safety glasses in accordance with European Standard EN 166. Make sure the safety glasses are a snug fit.

Wear hearing protection, e.g. ear defenders.

Wear a safety hard hat where there is a danger of head injuries from falling objects.

Wear sturdy protective gloves made of a resistant material (e. g. leather).

STIHL can supply a comprehensive range of personal protective equipment.

3.2 Transporting the machine

Always stop the engine.

Remove the auger before transporting the power tool long distances. **To reduce the risk of burn injury**, carry the unit by the handle frame with hot parts of the machine (e.g. gearbox) away from your body.

By vehicle: When transporting in a vehicle, properly secure your machine to prevent turnover, damage and fuel spillage.

3.3 Refueling

Gasoline is highly flammable – keep away from fire or flame – do not spill any fuel – no smoking.

Always **shut off the engine** before refueling.

Do not fuel a hot engine – fuel may spill and **cause a fire!**

Open the fuel cap carefully to allow any pressure build-up in the tank to release slowly and avoid fuel spillage.

Only refuel the machine in a well ventilated place. If fuel has been spilled, immediately clean the machine – do not allow your clothes to be splashed with fuel. If that happens, change your clothes at once.

After fueling, tighten down the screw-type fuel cap as securely as possible.

This helps reduce the risk of unit vibrations causing an incorrectly tightened fuel cap to loosen or come off and spill quantities of fuel.

Check for fuel leakage! Never start the engine if fuel has been spilled or is leaking – **Fatal burns may result!**

3.4 Before starting

Check that your power tool is properly assembled and in good condition – refer to appropriate chapters in the instructions for use.

- Check the fuel system for leaks, especially the visible parts, e. g., fuel cap, hose connections, manual fuel pump (only in machines with a manual fuel pump). In case of leakage and damage, do not start the engine – **risk of fire!** Have the machine serviced by a dealer before using it
- The stop switch must be easy to push
- Functional drill brake
- Check the choke lever, throttle trigger and throttle trigger lockout for smooth action - throttle trigger must return automatically to idle position. The choke lever must spring back from the ⅄ and ⅄ positions to the run position I when the throttle trigger lockout and throttle trigger are squeezed
- Check that the spark plug boot is secure – a loose boot may cause arcing that could ignite combustible fumes **and cause a fire!**
- Never attempt to modify the controls or safety devices
- Keep the handles dry and clean – free from oil and dirt – this is important for safe control of the machine

To reduce the risk of personal injury, do not operate your power tool if it is damaged or not properly assembled!

3.5 Starting the engine

Start the engine at least 3 meters from the fueling spot, outdoors only.

Place the power tool on level ground, make sure you have secure footing.

Engage the drill brake before starting. Otherwise, the drilling tool may begin to run, causing the user to lose control of the earth auger.

The machine is operated by a single person only – do not allow any person to stay within the working area – nor with starting.

To reduce the risk of injury, avoid contact with the drilling tool.

Do not drop-start the engine – start it as described in the instructions for use.

Check idle speed setting: The drilling tool must not rotate when the engine is idling with the throttle trigger released.

Keep easily combustible materials (e.g., wood chips, bark, dry grass, fuel) away from hot exhaust gases and the hot muffler surface – **risk of fire!**

3.6 Holding and guiding the machine

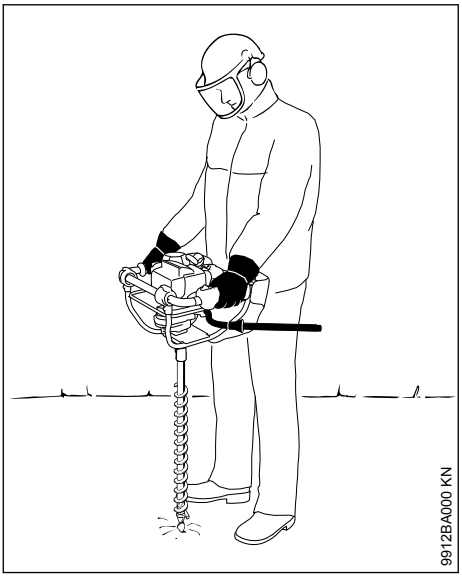

Always hold the unit firmly with both hands on the handles.

Ensure you always have a firm and safe footing – drill brake on left thigh.

Firmly grasp the handles with the thumbs, left hand on control handle.

3.7 While working

Make sure you always have good balance and secure footing.

In the event of impending danger or in an emergency, switch off the engine immediately by pressing the stop switch.

Do not allow any other persons in the work area. Keep well away from other people – **risk of accidents!**

Check for correct idling, so that the auger stops turning when the throttle trigger is released.

Check and correct the idle speed setting at regular intervals. If the drilling tool continues to rotate when the engine is idling, have the machine checked by your servicing dealer. STIHL recommends STIHL dealers.

Take special care in slippery conditions – **dampness, snow, ice**, on slopes or uneven ground.

Watch out for obstacles: tree stumps, roots – **risk of tripping or stumbling!**

Be particularly alert and cautious when wearing hearing protection because your ability to hear warnings (shouts, alarms, etc.) is restricted.

Take breaks when you start getting tired or feeling fatigue – **risk of accidents!**

Work calmly and carefully – in daylight conditions and only when visibility is good. Proceed with caution, do not put others in danger.

As soon as the engine is running, the power machine generates toxic exhaust gas. These gases may be odorless and invisible and may contain unburned hydrocarbons and benzene. Never run the engine indoors or in poorly ventilated locations, even if your model is equipped with a catalytic converter.

To reduce the risk of serious or fatal injury from breathing toxic fumes, ensure proper ventilation when working in trenches, hollows or other confined locations. **This reduces the risk of serious or fatal injury from breathing toxic fumes.**

Stop work immediately if you start suffering from nausea, headaches, impaired vision (e.g. your field of vision gets smaller), impaired hearing, dizziness, or impaired concentration – these symptoms may possibly be the result of too-high exhaust gas concentration – **Risk of accidents!**

Operate your power tool so that it produces a minimum of noise and emissions – do not run the engine unnecessarily, accelerate the engine only when working.

To reduce the risk of fire, **do not smoke** while operating or standing near your power tool. Combustible fuel vapor may escape from the fuel system.

Dust, fumes and smoke produced while working may be hazardous to your health. Wear respiratory protection in case of heavy dust or smoke emission.

If your power tool is subjected to unusually high loads for which it was not designed (e.g. heavy impact or a fall), always check that it is in good condition before continuing work – see also "Before Starting".

Check in particular that the fuel system has no leaks and the safety equipment is fully operative. Never use a power tool that is no longer safe to operate. In case of doubt, contact a dealer.

Do not operate your power tool in the starting throttle position – engine speed cannot be controlled in this position.

To reduce the risk of injury, do not touch the drilling tool and drilling spindle unless the engine is stopped and the drilling tool is at a standstill.

Avoid contact with lines carrying electrical current – **Risk of electrical shock!**

Hold the machine firmly so that sudden jolts can be absorbed – only apply a small amount of pressure when drilling.

Take particular care when working in stony areas or ground with roots.

Cover drilled holes and secure them.

To reduce the risk of injury, shut off the engine and engage the drill brake before changing the drill.

Do not touch machine parts, particularly the muffler – **Risk of burn injuries.**

Always shut off the engine before leaving the unit unattended.

Check drilling tools at regular short intervals during operation or immediately if there is a noticeable change in operating behavior. Replace damaged or dull drilling tools and blades immediately.

3.8 Vibrations

Prolonged use of the power tool may result in vibration-induced circulation problems in the hands (whitefinger disease).

No general recommendation can be given for the length of usage because it depends on several factors.

The period of usage is prolonged by:
- Hand protection (wearing warm gloves)
- Work breaks

The period of usage is shortened by:
- Any personal tendency to suffer from poor circulation (symptoms: frequently cold fingers, tingling sensations).
- Low outside temperatures.
- The force with which the handles are held (a tight grip restricts circulation).

Continual and regular users should monitor closely the condition of their hands and fingers. If any of the above symptoms appear (e.g. tingling sensation in fingers), seek medical advice.

3.9 Maintenance and Repairs

Service the machine regularly. Do not attempt any maintenance or repair work not described in the instruction manual. Have all other work performed by a servicing dealer.

STIHL recommends that you have servicing and repair work carried out exclusively by an authorized STIHL servicing dealer. STIHL dealers are regularly given the opportunity to attend training courses and are supplied with the necessary technical information.

Only use high-quality replacement parts in order to avoid the risk of accidents and damage to the machine. If you have any questions in this respect, consult a servicing dealer.

STIHL recommends the use of original STIHL replacement parts. They are specifically designed to match your model and meet your performance requirements.

To reduce the risk of injury from unintentional engine startup, **always shut off the engine and disconnect the spark plug boot** before performing any repairs, maintenance or cleaning work. – Exception: Carburetor and idle speed adjustments.

Do not turn the engine over on the starter with the spark plug boot or spark plug removed since there is otherwise a **risk of fire** from uncontained sparking.

To reduce the **risk of fire**, do not service or store your machine near open flames.

Check the fuel filler cap for leaks at regular intervals.

Use only a spark plug of the type approved by STIHL and make sure it is in good condition – see "Specifications".

Inspect the ignition lead (insulation in good condition, secure connection).

Check the condition of the muffler.

To reduce the **risk of fire and damage to hearing**, do not operate your machine if the muffler is damaged or missing. –

Do not touch a hot muffler since **burn injury** will result.

Vibration behavior is influenced by the condition of the AV elements – check the AV elements at regular intervals.

4 Assembling the Unit

4.1 Fitting the activating lever for the drill brake

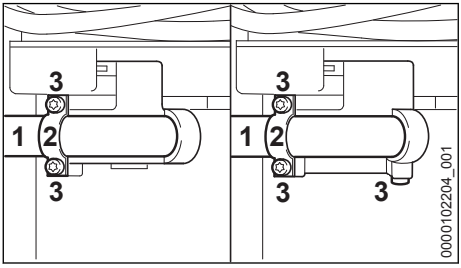

- Insert the activating lever (1) into the clamp
- Place the holder (2) onto the activating lever
- Screw in the fastening screws (3) and tighten

4.2 Fitting the support cushion

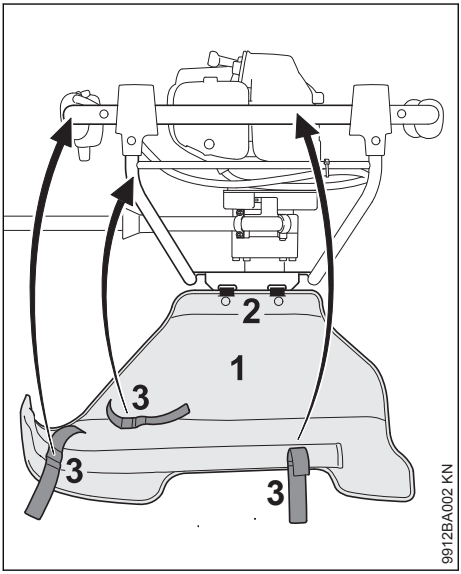

- Hook the support cushion (1) by the tabs (2) into the oblong holes in the handle frame
- Fold up the support cushion

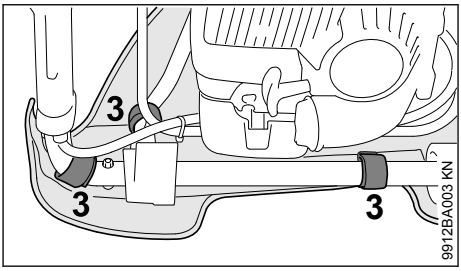

- Secure the support cushion to the handlebar with the cling strips (3) – do not jam the throttle cable

5 Adjusting the Throttle Cable

It may be necessary to correct the adjustment of the throttle cable after assembling the machine or after a prolonged period of operation.

Adjust the throttle cable only when the machine is completely and properly assembled.

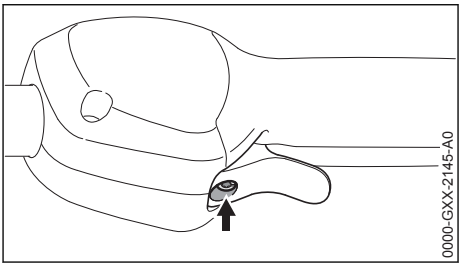

- Set the throttle trigger to the full throttle position.
- Rotate the screw in the throttle trigger clockwise until you feel initial resistance. Then rotate it another half turn in the same direction.

6 Fuel

The engine requires a mixture of gasoline and engine oil.

WARNING

Avoid direct skin contact with fuel and breathing in of gasoline fumes.

6.1 STIHL MotoMix

STIHL recommends using STIHL MotoMix. This pre-blended fuel is free of benzene and lead, is distinguished by a high octane rating, and always provides the proper mixing ratio.

STIHL MotoMix uses STIHL HP Ultra two-stroke engine oil for optimum engine life.

MotoMix is not available in all markets.

6.2 Mixing fuel

NOTICE

Unsuitable fuels or a mixing ratio that deviates from the specification can lead to severe engine damage. The engine, seals, fuel lines and fuel tank may be damaged if low-quality gasoline or engine oil is used.

6.2.1 Gasoline

Use only **high-quality gasoline** with an octane rating of at least 90 ROC – leaded or unleaded.

Gasoline with an alcohol component exceeding 10% can cause impaired engine performance in engines with manually adjustable carburetors and thus should not be used in these engines.

Engines with M-Tronic deliver full engine performance using gasoline with an alcohol component of up to 27% (E27).

6.2.2 Engine oil

If you mix the fuel yourself, use only STIHL two-stroke engine oil or another high-performance engine oil classified as JASO FB, JASO FC, JASO FD, ISO-L-EGB, ISO-L-EGC or ISO-L-EGD.

STIHL specifies STIHL HP Ultra two-stroke engine oil or an equivalent high-performance engine oil in order to maintain emission limits over the machine's service life.

6.2.3 Mixing ratio

with STIHL two-stroke engine oil 1:50; 1:50 = 1 part oil + 50 parts gasoline

6.2.4 Examples

Quantity of gasoline	STIHL two-stroke engine oil 1:50	
Liters	Liters	(ml)
1	0.02	(20)
5	0.10	(100)
10	0.20	(200)
15	0.30	(300)
20	0.40	(400)
25	0.50	(500)

- Pour oil into an approved safety fuel canister first, then add gasoline and mix thoroughly

6.3 Storing fuel mixture

Store in approved safety fuel canisters only in a dry, cool and secure place protected against light and sunlight.

Fuel mixture deteriorates with age – mix only as much as needed for a few weeks. Do not store fuel mixture for longer than 30 days. The fuel mixture can become unusable more quickly if exposed to light, sunlight or low or high temperatures.

STIHL MotoMix however can be stored for up to 5 years without any problems.

- Shake the canister containing the fuel mixture thoroughly before refueling

WARNING

Pressure may have built up in the canister – open it carefully.

- The fuel tank and the canister in which fuel mixture is stored should be cleaned thoroughly from time to time

Residual fuel and the liquid used for cleaning must be disposed of in accordance with regulations and without harming the environment!

7 Fueling

7.1 Preparations

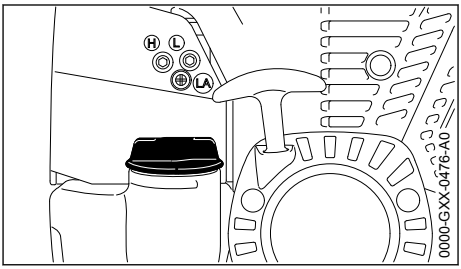

- Before fueling, clean the filler cap and the area around it to ensure that no dirt falls into the tank.
- Position the machine so that the tank cap faces up.

7.2 Opening the Tank Cap

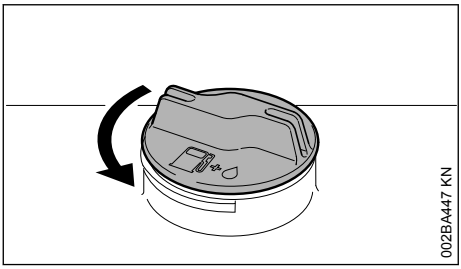

- Turn the cap counterclockwise until it can be removed from the tank opening.
- Remove the tank cap.

7.3 Filling Up with Fuel

Take care not to spill fuel while fueling and do not overfill the tank.

STIHL recommends you use the STIHL filler nozzle for fuel (special accessory).

- Fill up with fuel.

7.4 Closing the Tank Cap

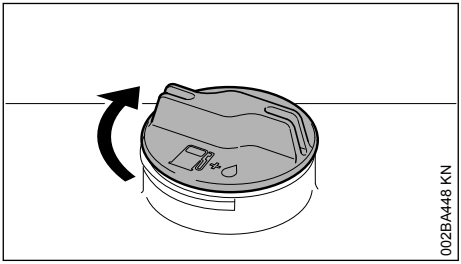

- Place the cap in the opening.
- Turn the cap clockwise as far as stop and tighten it down as firmly as possible by hand.

8 Auger Brake

8.1 Engaging the Auger Brake

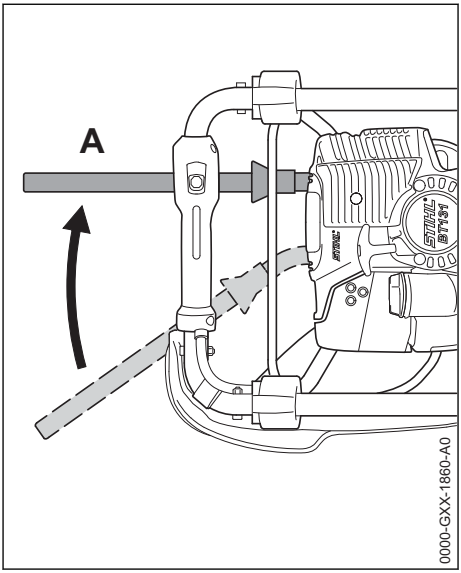

- Move the activating lever to position **A** .
  - when starting
  - at idling speed
  - to unwind a trapped auger

If the auger snags on an obstacle in the hole (e.g. roots or stones) the machine will begin to turn counterclockwise – the activating lever is pressed against the operator's thigh and thus engages the auger brake.

8.2 Disengaging the Auger Brake

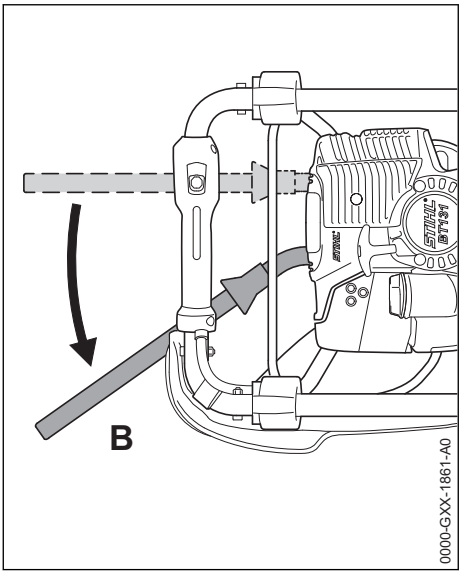

- Move the activating lever to position **B**

8.3 Checking Operation of Auger Brake

The auger brake is subject to normal wear and tear. Regularly check that it is operating properly before you start work and after releasing a trapped auger.

8.3.1 Before starting work and after releasing a trapped auger

- With the engine running at idle speed, engage the auger brake and then open the throttle wide for no more than 3 seconds – the auger must not rotate.

If the auger brake fails, have it repaired immediately by your dealer – STIHL recommends that this work be performed by a STIHL servicing dealer.

9 Fitting the Auger

- Shut off the engine and engage the auger brake – see "Auger Brake".
- Put the machine down.

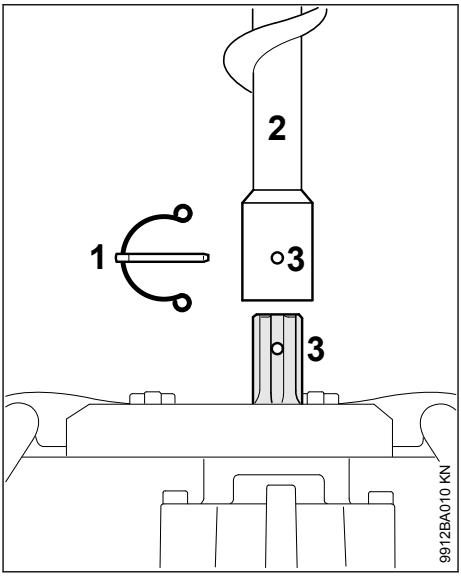

- Pull the retaining pin (1) out of the auger's shank.
- Push the auger (2) onto the drilling spindle so that the holes (3) line up.
- Push the retaining pin into the hole.
- Spring clip on the retaining pin must fit snugly around the auger's shank.

10 Starting / Stopping the Engine

10.1 Engaging the Auger Brake

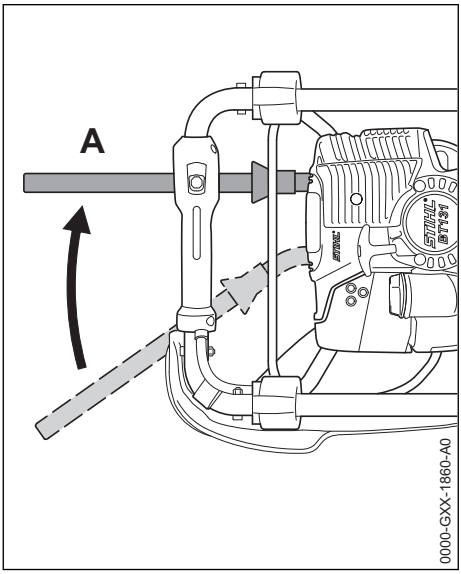

► Move the activating lever to position **A** . Auger brake is engaged and auger is blocked.

10.2 Controls

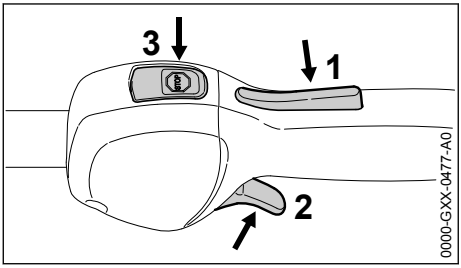

1 **Throttle trigger lockout**

2 **Throttle trigger**

3 **Stop switch with Run and Stop positions. Depress the stop switch (⊖) to switch off the ignition – see "Function of Stop Switch and Ignition System".**

10.2.1 Function of Stop Switch and Ignition System

The stop switch is normally in the Run position, i.e. when it is **not** depressed: The ignition is switched on – the engine is ready to start. Operate the stop switch to switch off the ignition. The ignition is switched on again automatically after the engine stops.

10.3 Starting the Engine

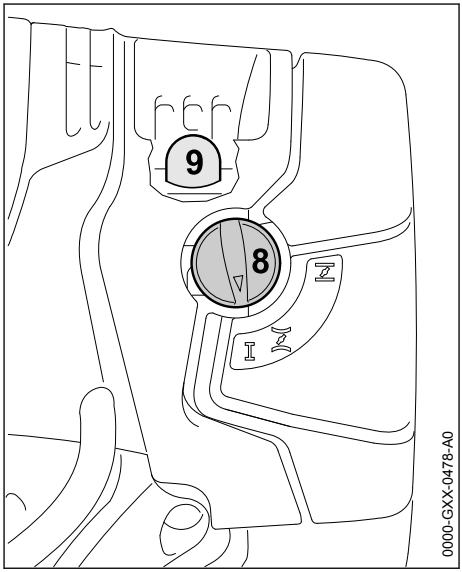

► Press the manual fuel pump bulb (9) at least five times – even if the bulb is already filled with fuel.

► Press home the choke knob (8) and turn it to the required position – it must engage

if the engine is cold

for warm start – also use this position if the engine has been running but is still cold.

10.4 Cranking

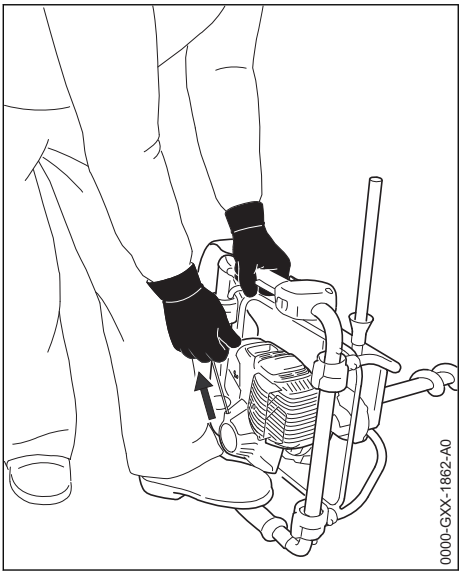

- Place the unit on the ground:
- Check that the auger brake is engaged.
- Make sure you have a safe and secure footing.
- Put your left foot on the handle frame.
- Left hand on the handle frame – do not touch the throttle trigger or lockout lever – your thumb should be under the fan housing.
- Hold the starter grip with your right hand.
- Pull the starter grip slowly until you feel it engage and then give it a brisk strong pull.

NOTICE

Do not pull out the starter rope all the way – **it might otherwise break**.

- Do not let the starter grip snap back. Guide it slowly back into the housing so that the starter rope can rewind properly.
- Continue cranking until the engine runs.

10.4.1 As Soon As the Engine Runs

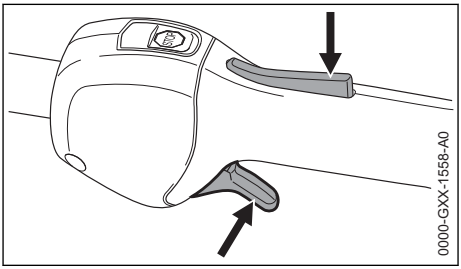

- Depress throttle trigger lockout and immediately blip the throttle trigger – the choke knob moves to the run I position.

NOTICE

Since the auger brake is still engaged, the engine must be returned to idling speed **immediately** – or the clutch might otherwise be damaged.

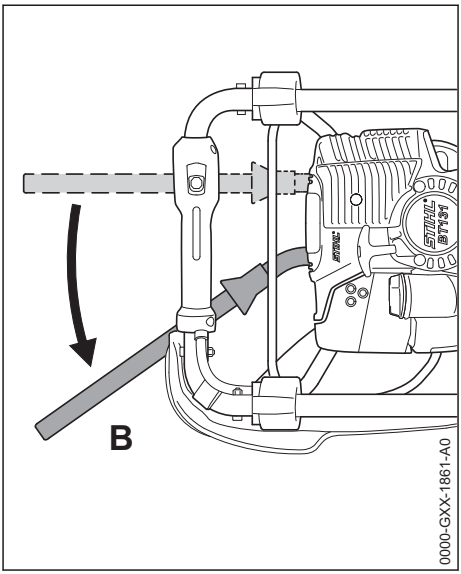

- Stand the machine on the tip of the auger.
- Disengage the auger brake by moving the activating lever to position **B**. Your earth auger is now ready for operation.

WARNING

Make sure the carburetor is correctly adjusted. The auger must not rotate when the engine is idling.

Your machine is now ready for operation.

10.5 Stopping the Engine

- Depress the momentary contact stop switch – the engine stops – release the stop switch – it springs back to the run position.

10.6 Other Hints on Starting

Engine stalls in cold start position or under acceleration.

- Move the choke knob to and continue cranking until the engine runs.

Engine does not start in warm start position

- Move the choke knob to and continue cranking until the engine runs.

If the engine does not start

- Check that all settings are correct.
- Check that there is fuel in the tank and refuel if necessary.
- Check that the spark plug boot is properly connected.
- Repeat the starting procedure.

Engine is flooded

- Move the choke knob to I and continue cranking until the engine runs.

Fuel tank run until completely dry

- After refueling, depress the manual fuel pump bulb at least 5 times – even if the bulb is already filled with fuel.
- Set the choke knob to suit the engine temperature.
- Now start the engine.

11 Operating Instructions

11.1 During Break-In Period

A factory-new machine should not be run at high revs (full throttle off load) for the first three tank fillings. This avoids unnecessary high loads during the break-in period. As all moving parts have to bed in during the break-in period, the frictional resistances in the engine are greater during this period. The engine develops its maximum power after about 5 to 15 tank fillings.

11.2 During Operation

After a long period of full throttle operation, allow the engine to run for a short while at idle speed so that engine heat can be dissipated by the flow of cooling air. This helps protect engine-mounted components (ignition, carburetor) from thermal overload.

11.3 After Finishing Work

Storing for a short period: Wait for the engine to cool down. To avoid condensation, fill the fuel tank and keep the machine in a dry place, well away from sources of ignition, until you need it again. For longer out-of-service periods – see "Storing the Machine".

11.4 Working with shaft extension (special accessory)

Do not fit the shaft extension until the full length of the auger is in the hole.

WARNING

Starting a hole with the shaft extension fitted increases the risk of personal injury because the unit is then at chest height and cannot be controlled properly. For the same reason the shaft extension must be removed before the full length of the auger is pulled out of the hole.

12 Releasing a Trapped Auger

12.1 If the auger jams in the drill hole

- Shut off the engine immediately.
- Depress the momentary contact stop switch – the engine stops – release the stop switch – it springs back to the run position.

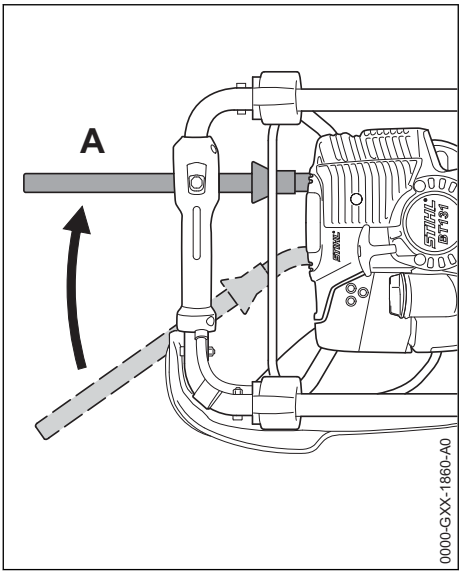

- Engage the auger brake by moving the activating lever to position **A**.
- Rotate the whole machine counterclockwise to unwind the auger from the ground.
- After releasing the trapped auger, check operation of the auger brake – see “Auger Brake”.

13 Replacing the Air Filter

Filters have an average life of more than a year. Do not remove the filter cover or replace the air filter as long as there is no noticeable loss of power.

13.1 If there is a noticeable loss of engine power.

- Remove padding from the handle frame.

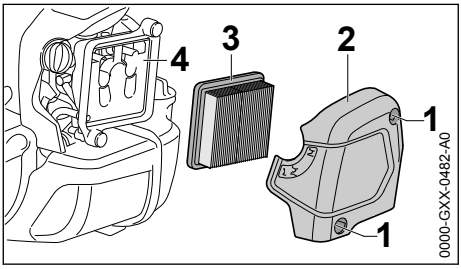

- Turn the choke knob to ⅊.
- Take out the screws (1).
- Remove the filter cover (2).
- Clean away loose dirt from around the filter.
- Remove the filter element (3).
- Replace dirty or damaged filter.
- Replace any damaged parts.

13.2 Installing the Filter Element

- Install the filter element in the filter housing and fit the cover.
- Fit the screws and tighten them down firmly.
- Fit the padding – see "Assembling the Unit".

14 Adjusting the Carburetor

The carburetor has been set at the factory to provide an optimum fuel-air mixture under most operating conditions.

14.1 Adjusting Idle Speed

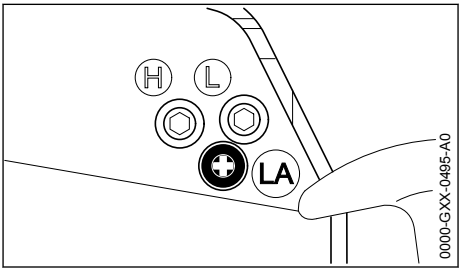

Engine stops while idling

- Warm up the engine for about 3 minutes.
- Turn the idle speed screw (LA) slowly clockwise until the engine runs smoothly – the auger must not rotate.

Auger rotates when engine is idling

- Turn the idle speed screw (LA) slowly counterclockwise until the auger stops rotating and then turn the screw about another 1/2 to 3/4 turn in the same direction.

WARNING

If the auger continues to rotate when the engine is idling, have your machine checked and repaired by your servicing dealer.

15 Spark Plug

- If the engine is down on power, difficult to start or runs poorly at idle speed, first check the spark plug.
- Fit a new spark plug after about 100 operating hours – or sooner if the electrodes are badly eroded. Install only suppressed spark plugs of the type approved by STIHL – see "Specifications".

15.1 Removing the Spark Plug

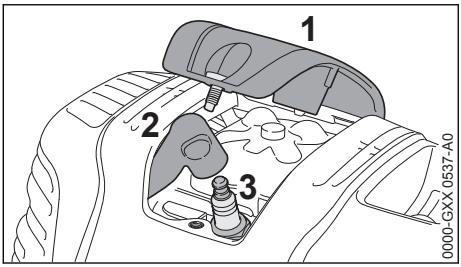

- Remove the cover (1).
- Pull off the spark plug boot (2).
- Unscrew the spark plug (3).

15.2 Checking the Spark Plug

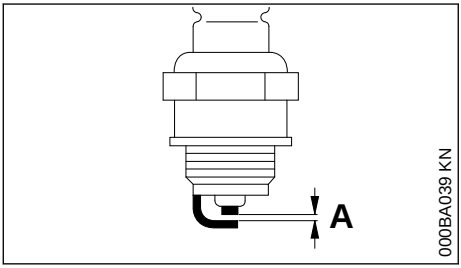

- Clean dirty spark plug.
- Check electrode gap (A) and readjust if necessary – see "Specifications".
- Rectify the problems which have caused fouling of the spark plug.

Possible causes are:
– Too much oil in fuel mix.
– Dirty air filter.
– Unfavorable running conditions.

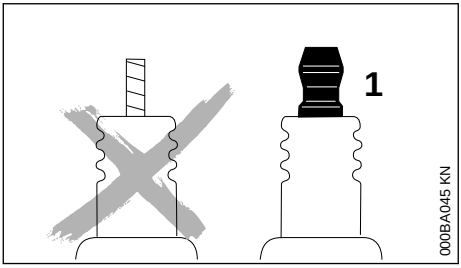

WARNING

Arcing may occur if the adapter nut (1) is loose or missing. Working in an easily combustible or explosive atmosphere may cause a fire or an explosion. This can result result in serious injuries or damage to property.

- Use resistor type spark plugs with a properly tightened adapter nut.

15.3 Installing the Spark Plug

- Screw the spark plug (3) into the cylinder.
- Tighten down the spark plug (3) with the combination wrench.
- Press the boot (2) firmly onto the spark plug.
- Fit the cover (1) and screw it down firmly.

16 Engine Running Behavior

If engine running behavior is still unsatisfactory after the air filter has been serviced and the carburetor and throttle cable have been adjusted correctly, the cause may also be in the muffler.

Have the muffler checked for contamination (coking) by a servicing dealer!

STIHL recommends that maintenance and repair work be carried out only by authorized STIHL dealers.

17 Lubricating the Gearbox

Check grease level after every 50 hours of operation and re-lubricate if necessary.

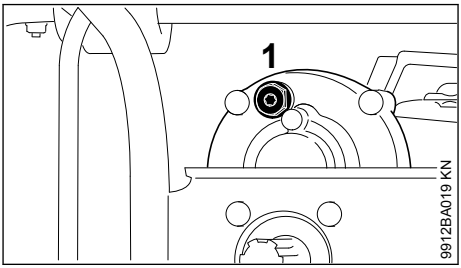

- Remove the screw plug (1).

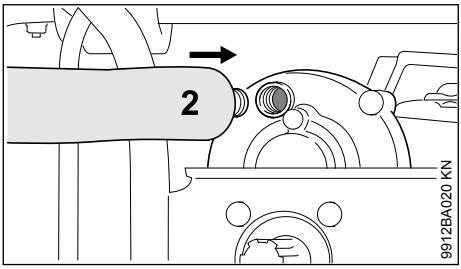

- If no grease can be seen on the inside of the screw plug (1): Screw the tube (2) of STIHL gear lubricant (special accessory) into the filler hole.
- Squeeze about 5 - 10 g (1/5 - 2/5 oz) grease into the gearbox.

NOTICE

Do not completely fill the gearbox with grease.

- Unscrew the tube (2).
- Insert the screw plug (1) and tighten it down firmly.

18 Storing the Machine

If not used for periods of about 30 days or longer

- Remove the drilling tool
- Drain and clean the fuel tank in a well-ventilated area.
- Dispose of fuel properly in accordance with local environmental requirements.
- If a manual fuel pump is fitted: Press the manual fuel pump at least 5 times.
- Start the engine and run it at idling speed until it stops
- Thoroughly clean the machine
- Store the machine in a dry and secure location. Keep out of the reach of children and other unauthorized persons

19 Maintenance and Care

The following intervals apply for normal operating conditions. The specified intervals must be shortened accordingly when working for longer than normal or under difficult cutting conditions (extensive dust, etc.).		Before starting work	At the end of work and/or daily	Whenever tank is refilled	Weekly	Monthly	Annually	If faulty	If damaged	As required
Complete machine	Visual inspection (condition, leaks)	X		X						
	Clean		X							
	Replace any damaged parts	X							X	
Drill brake	Function test	X		X						
	have them serviced by a specialist dealer[1)]									X
Control handle	Function test	X		X						
Air filter	Visual examination					X		X		
	Replace[2)]								X	X
Manual fuel pump (if present)	check	X								
	Have repaired by a specialist dealer[1)]								X	
Fuel pickup body in fuel tank	Have checked by dealer[1)]							X		

The following intervals apply for normal operating conditions. The specified intervals must be shortened accordingly when working for longer than normal or under difficult cutting conditions (extensive dust, etc.).		Before starting work	At the end of work and/or daily	Whenever tank is refilled	Weekly	Monthly	Annually	If faulty	If damaged	As required
	Have replaced by servicing dealer[1)]						X		X	X
Fuel tank	Clean							X		X
Carburetor	Check idle adjustment – drilling spindle must not rotate	X		X						
	Adjust idle speed									X
Spark plug	Set electrode gap							X		
	Replace after every 100 hours of operation									
Cooling air intakes	Visual examination		X							
	Clean									X
Cylinder fins	Have cleaned by dealer[1)]						X			
Valve clearance	If power is low or cranking effort very high, have valve clearance checked and, if necessary, adjusted by dealer[1)]									X
Combustion chamber	Have cleaned after every 150 hours of operation by dealer[1)]									X
Spark arresting screen in muffler, available in market-specific versions	check		X					X		
	Clean or replace								X	X
All accessible screws, nuts and bolts (not adjusting screws)	Tighten									X
Anti-vibration elements	check	X						X		X
	Have replaced by servicing dealer[1)]								X	
Gearbox lubrication	check				X					
	top up									X
Drilling spindle	Clean		X							
Drilling tool	check	X								
	replace								X	X
Auger blade	check	X								
	Turn over or replace								X	X
Safety information label	replace								X	

The following intervals apply for normal operating conditions. The specified intervals must be shortened accordingly when working for longer than normal or under difficult cutting conditions (extensive dust, etc.).	Before starting work	At the end of work and/or daily	Whenever tank is refilled	Weekly	Monthly	Annually	If faulty	If damaged	As required
[1]STIHL recommends STIHL dealers [2]Only if there is a noticeable loss of engine power									

20 Main Parts

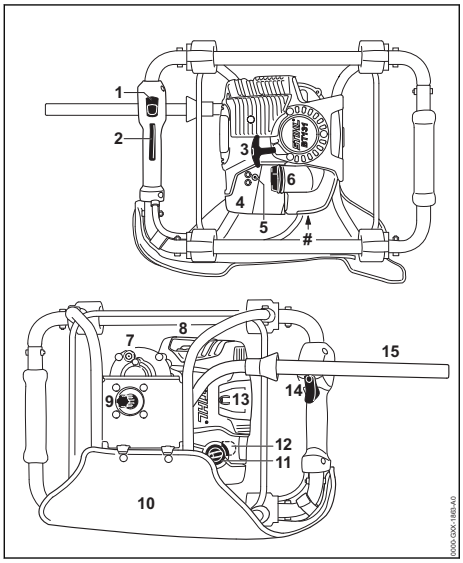

1 Stop switch
2 Throttle trigger lockout
3 Starter grip
4 Filter cover
5 Carburetor adjusting screw
6 Tank cap
7 Screw plug
8 Muffler with spark arresting screen[1)]
9 Drilling spindle
10 Hip padding
11 Choke knob
12 Manual fuel pump
13 Spark plug cover
14 Throttle trigger
15 Auger brake lever
Serial Number

21 Specifications

21.1 Engine

STIHL single cylinder four-stroke engine with mixture lubrication

Displacement:	36.3cm^3
Cylinder bore:	43 mm
Piston stroke:	25 mm
Engine power:	1.4 kW (1.9 hp) at 8500 rpm
Idle speed:	2800 rpm
Cut-off speed:	9500 rpm
Valve clearance	
Inlet valve:	0.10 mm
Exhaust valve:	0.10 mm

21.2 Ignition system

Electronic magneto ignition

Spark plug (suppressed):	NGK CMR 6H, BOSCH USR 4AC
Electrode gap:	0.5 mm

21.3 Fuel system

All-position diaphragm carburetor with integral fuel pump

Fuel tank capacity:	710 cm^3 (0.71 l)

[1)] Spark arresting screen not fitted on all markets

21.4 Drilling gear

2-level spur gearbox

Transmission ratio:	47.5:1
Max. spindle speed:	200 rpm
Max. torque at drilling spindle:	81 Nm
Lubrication:	STIHL gear lubricant for brushcutters

21.5 Weight

without fuel, without drilling tool:	10 kg

21.6 Dimensions

Length with support frame:	400 mm
Width with support frame:	530 mm
Height without drilling tool:	365 mm

21.7 Sound and Vibration Levels

When determining sound and vibration levels, idling and the nominal maximum engine speed are taken into account in a ratio of 1:4.

For further details on compliance with Vibration Directive 2002/44/EC, see

www.stihl.com/vib

21.7.1 Sound pressure level L_{peq} in accordance with ISO 11201

92 dB(A)

21.7.2 Sound power level L_{weq} in accordance with ISO 3744

100 dB(A)

21.7.3 Vibration level $a_{hv,eq}$ in accordance with ISO 20643

90 mm earth auger

Handle, left:	1.7 m/s^2
Handle, right:	2.0 m/s^2

The K-factor in accordance with Directive 2006/42/EC is 2.0 dB(A) for the sound pressure level and sound power level; the K-factor in accordance with Directive 2006/42/EC is 2.0 m/s^2 for the vibration level.

21.8 REACH

REACH is an EC regulation and stands for the Registration, Evaluation, Authorization and Restriction of Chemical substances.

For information on compliance with the REACH regulation (EC) No. 1907/2006 see

www.stihl.com/reach

21.9 Exhaust Emissions

The CO_2 value measured in the EU type approval procedure is specified at

www.stihl.com/co2

in the product-specific technical data.

The measured CO_2 value was determined on a representative engine in accordance with a standardized test procedure under laboratory conditions and does not represent either an explicit or implied guarantee of the performance of a specific engine.

The applicable exhaust emission requirements are fulfilled by the intended usage and maintenance described in this User Manual. The operating license shall be void if the engine is modified in any way.

22 Maintenance and Repairs

Users of this machine may only carry out the maintenance and service work described in this user manual. All other repairs must be carried out by a servicing dealer.

STIHL recommends that you have servicing and repair work carried out exclusively by an authorized STIHL servicing dealer. STIHL dealers are regularly given the opportunity to attend training courses and are supplied with the necessary technical information.

When repairing the machine, only use replacement parts which have been approved by STIHL for this power tool or are technically identical. Only use high-quality replacement parts in order to avoid the risk of accidents and damage to the machine.

STIHL recommends the use of original STIHL replacement parts.

Original STIHL parts can be identified by the STIHL part number, the STIHL® logo and the STIHL parts symbol ®. (the symbol may appear alone on small parts).

23 Disposal

Contact the local authorities or your STIHL servicing dealer for information on disposal.

Improper disposal can be harmful to health and pollute the environment.

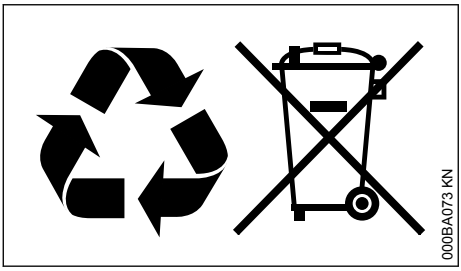

- Take STIHL products including packaging to a suitable collection point for recycling in accordance with local regulations.
- Do not dispose with domestic waste.

24 EC Declaration of Conformity

ANDREAS STIHL AG & Co. KG
Badstr. 115
D-71336 Waiblingen

Germany

declares under its sole responsibility that

Designation:	Earth auger device
Make:	STIHL
Series:	BT 131
Serial identification number:	4313
Displacement:	36.3 cm^3

conforms to the relevant provisions of Directives 2011/65/EU, 2006/42/EC and 2014/30/EU and has been developed and manufactured in compliance with the following standards in the versions valid on the date of production:

EN ISO 12100, EN 55012, EN 61000-6-1

Technical documents deposited at:

ANDREAS STIHL AG & Co. KG
Produktzulassung

The year of manufacture and serial number are indicated on the power tool.

Waiblingen, 2022-08-01

ANDREAS STIHL AG & Co. KG

pp

Robert Olma, Vice President, Regulatory Affairs & Global Governmental Relations

0458-529-8321-C

www.stihl.com

0458-529-8321-C