FS 131, 131 R

STIHL

2 - 39 Instruction Manual

Contents

1 Introduction.....2
2 Guide to Using this Manual.....2
3 Safety Precautions and Working Techniques.....3
4 Approved Combinations of Cutting Attachment, Deflector, Handle and Harness.....12
5 Approved Power Tool Attachments.....13
6 Mounting the Bike Handle.....13
7 Mounting the Loop Handle.....16
8 Adjusting the Throttle Cable.....17
9 Fitting the Carrying Ring.....17
10 Mounting the deflector.....18
11 Mounting the Cutting Attachment.....19
12 Fuel.....22
13 Fueling.....22
14 Fitting the Harness.....23
15 Balancing the Machine.....24
16 Starting / Stopping the Engine.....26
17 Transporting the Unit.....28
18 Operating Instructions.....30
19 Replacing the Air Filter.....30
20 Adjusting the Carburetor.....31
21 Spark Plug.....31
22 Engine Running Behavior.....32
23 Lubricating the Gearbox.....32
24 Storing the Machine.....32
25 Sharpening Metal Cutting Blades.....32
26 Maintaining the Mowing Head.....33
27 Maintenance and Care.....34
28 Minimize Wear and Avoid Damage.....36
29 Main Parts.....36
30 Specifications.....37
31 Maintenance and Repairs.....38
32 Disposal.....38
33 EC Declaration of Conformity.....38
34 UKCA Declaration of Conformity.....39
35 Addresses.....39

1 Introduction

Dear Customer,

Thank you for choosing a quality engineered STIHL product.

It has been built using modern production techniques and comprehensive quality assurance. Every effort has been made to ensure your satisfaction and trouble-free use of the product.

Please contact your dealer or our sales company if you have any queries concerning this product.

Your

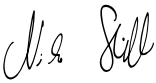

Dr. Nikolas Stihl

2 Guide to Using this Manual

2.1 Pictograms

The meanings of the pictograms attached to the machine are explained in this manual.

Depending on the model concerned, the following pictograms may be attached to your machine.

Fuel tank; fuel mixture of gasoline and engine oil

Operate decompression valve

Manual fuel pump

Operate manual fuel pump

Tube of grease

Intake air: Summer operation

Intake air: Winter operation

Handle heating

2.2 Symbols in text

Warning where there is a risk of an accident or personal injury or serious damage to property.

NOTICE

Caution where there is a risk of damaging the machine or its individual components.

2.3 Engineering improvements

STIHL's philosophy is to continually improve all of its products. For this reason we may modify

Original Instruction Manual
0000007296_026_GB

Printed on chlorine-free paper
Paper is recyclable.

© ANDREAS STIHL AG & Co. KG 2025
0458-432-0121-B. VA7.G25.

the design, engineering and appearance of our products periodically.

Therefore, some changes, modifications and improvements may not be covered in this manual.

3 Safety Precautions and Working Techniques

Because the machine is a high-speed fast-cutting power tool, special safety precautions must be observed to reduce the risk of personal injury.

It is important that you read and understand the User Manual before commissioning and keep it in a safe place for future reference. Non-compliance with the User Manual may cause serious or even fatal injury.

Observe all applicable local safety regulations, e.g. by trade organizations, social insurance institutions, labor safety authorities etc.

If you have never used a power tool before: Have your dealer or other experienced user show you how to operate your machine – or attend a special course to learn how to operate it.

Minors should never be allowed to use the machine – except for apprentices over the age of 16 when working under supervision.

Children, animals and bystanders must remain at a distance.

When not using the machine, it must be laid down in such a way that it does not endanger anyone. Ensure that the machine cannot be used without authorization.

The user is responsible for accidents or risks involving third parties or their property.

Do not lend or rent your power tool without the User Manual. Be sure that anyone using it understands the information contained in this manual.

The use of machines that emit noise may be limited to certain hours of the day as specified by national and/or regional or local regulations.

Anyone operating the machine must be well rested, in good physical health and in good mental condition.

If you have any condition that might be aggravated by strenuous work, check with your doctor before operating a machine.

If you have a pacemaker: The ignition system of your machine produces an electromagnetic field of very low intensity. This field may interfere with some pacemakers. STIHL recommends that persons with pacemakers consult their physician and the pacemaker manufacturer to reduce any health risk.

Anyone who has consumed alcohol or drugs or medicines affecting their ability to react must not operate a power tool.

Depending on the cutting attachment fitted, use your power tool only for cutting grass, wild growth, shrubs, scrub, bushes, small diameter trees and similar materials.

The machine must not be used for any other purposes – **risk of accidents!**

Only use cutting attachments and accessories that are explicitly approved for this power tool model by STIHL or are technically identical. If you have any questions in this respect, consult your dealer. Use only high quality parts and accessories. in order to avoid the risk of accidents and damage to the machine.

STIHL recommends the use of original STIHL tools and accessories. They are specifically designed to match the product and meet your performance requirements.

Never attempt to modify your power tool in any way since this may increase the risk of personal injury. STIHL excludes all liability for personal injury and damage to property caused while using unauthorized attachments.

Do not use a high-pressure washer to clean the power tool. The solid jet of water may damage parts of the unit.

The guard provided with your machine may not protect the operator from all foreign objects (gravel, glass, wire etc.) ejected by the revolving cutting attachment. Ejected objects may also ricochet and strike the operator.

3.1 Clothing and equipment

Wear proper protective clothing and equipment.

Clothing must be sturdy but allow complete freedom of movement. Wear close-fitting clothes such as a boiler suit, not a loose jacket.

Do not wear clothing which could become trapped in wood, brush or moving parts of the machine. Do not wear a scarf, necktie or jewelry. Tie

up and confine long hair above your shoulders.

Wear safety boots with steel toe caps and non-slip soles.

Sturdy shoes with non-slip shoes are permissible only when using mowing heads.

To reduce the risk of eye injuries, wear close-fitting safety glasses in accordance with European Standard EN 166. Make sure the safety glasses are a snug fit.

Wear face protection and make sure it is a good fit. Face protection alone is not sufficient to protect the eyes.

Wear "personal" sound protection, e.g. ear defenders.

Wear a safety hard hat for thinning operations, when working in high scrub and where there is a danger of head injuries from falling objects.

Wear sturdy protective gloves made of a resistant material (e. g. leather).

STIHL can supply a comprehensive range of personal protective equipment.

3.2 Transporting the machine

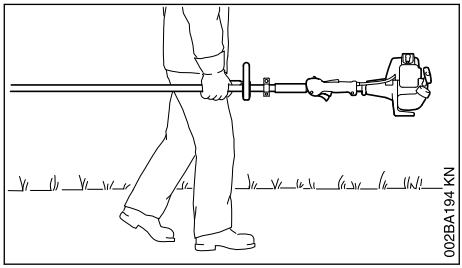

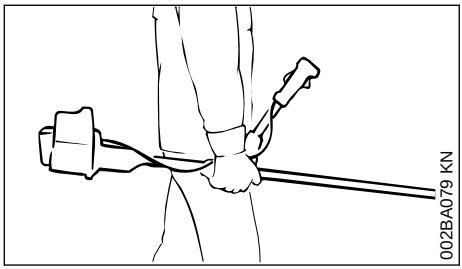

Always stop the engine.

Carry the machine hanging on the harness or by the shaft so that it is balanced.

To reduce the risk of cut injuries, fit transport guard on the cutting attachment, even when carrying the tool for short distances – see also "Transporting the Unit".

Avoid touching hot parts of the machine and gearbox – **risk of burns!**

By vehicle: When transporting in a vehicle, properly secure your machine to prevent turnover, damage and fuel spillage.

3.3 Refueling

Gasoline is an extremely flammable fuel. Keep clear of naked flames. Do not spill any fuel – do not smoke.

Always shut off the engine before refueling.

Do not fuel a hot engine – **fuel may spill and cause a fire.**

Open the fuel cap carefully to allow any pressure build-up in the tank to release slowly and avoid fuel spillage.

Only refuel the machine in a well ventilated place. If fuel has been spilled, immediately clean the machine – do not allow your clothes to be splashed with fuel. If that happens, change your clothes at once.

After refueling, close the fuel cap as tightly as possible.

This helps reduce the risk of unit vibrations causing an incorrectly tightened fuel cap to loosen or come off and spill quantities of fuel.

Check for leaks. Do not start the engine if there is a fuel leak – **serious or fatal burns could result!**

3.4 Before starting

Check that your power tool is properly assembled and in good condition – refer to appropriate chapters in the User Manual.

– Check the fuel system for leaks, especially the visible parts, e. g., fuel cap, hose connections, manual fuel pump (only in machines with a manual fuel pump). In case of leakage and damage, do not start the engine – **risk of fire!** Have the machine serviced by a dealer before using it

- Use only an approved combination of cutting attachment, deflector, handle and harness. All parts must be assembled properly and securely
- The stop switch must be easy to push
- Check the choke lever, throttle trigger and throttle trigger lockout for smooth action - throttle trigger must return automatically to idle position. The choke lever must spring back from the ⅊ and ⅊ positions to the run position I when the throttle trigger lockout and throttle trigger are squeezed
- Check that the spark plug boot is secure – a loose boot may cause sparking that could ignite combustible fumes **and cause a fire!**
- Cutting attachment or interchangeable attachment: correctly fitted, secure and in perfect condition
- Safety devices (e. g., deflector for cutting attachments, rider plate) for damage and/or wear. Always replace damaged parts. Do not use the machine with a damaged deflector or worn rider plate (if the writing and arrows are no longer discernible)
- Never attempt to modify the controls or safety devices
- Keep the handles dry and clean – free from oil and dirt – this is important for safe control of the machine
- Adjust the harness and handle(s) to suit your height and reach. Observe the chapter "Fitting the Harness" – "Balancing the machine"

To reduce the risk of personal injury, do not operate your power tool if it is damaged or not properly assembled!

To prepare for emergencies when using a harness: Practice setting down the machine quickly. To avoid damage, do not throw the unit to the ground when practicing.

3.5 Starting the engine

Start the engine at least 3 meters from the fueling spot, outdoors only.

Place the unit on firm ground in an open area. Make sure you have good balance and secure footing. Hold the unit securely. The cutting attachment must be clear of the ground and all other obstructions because it may begin to run when the engine starts.

This is a one-person machine – ensure that there is no-one within 15 meters of the machine, not even when starting the power tool! **Risk of injury** due to ejected objects!

Avoid contact with the cutting attachment – **risk of injury!**

Do not drop-start the power tool – start the engine as described in the User Manual. The cutting attachment runs on for a short while after releasing the throttle trigger – **coasting effect!**

Check engine idling: The cutting attachment must remain at a standstill when the engine idles – throttle trigger released.

Keep easily combustible materials (e. g., wood chips, bark, dry grass, fuel) away from hot exhaust gases and hot muffler surfaces – **risk of fire!**

3.6 Holding and guiding the machine

Always hold the unit firmly with both hands on the handles.

Make sure you always have good balance and secure footing.

3.6.1 For versions with bike handle

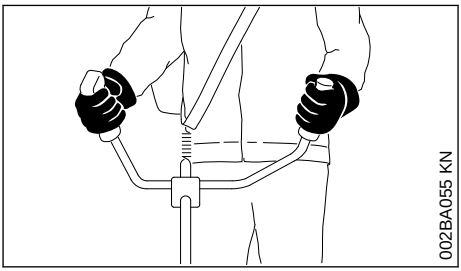

Right hand on control handle, left hand on grip on handlebar.

3.6.2 For versions with loop handle

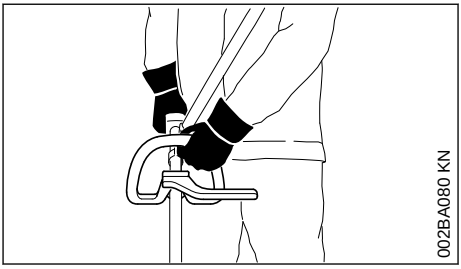

For versions with loop handle and loop handle with barrier bar, left hand on the loop handle,

right hand on the control handle – even if you are left-handed.

3.7 While working

Make sure you always have good balance and secure footing.

In the event of impending danger or in an emergency, switch off the engine immediately by pressing the stop switch.

There is a risk of accident from ejected objects within a wide area around the working area, so you must ensure that there is no-one within a 15 m radius of the machine. This distance must also be maintained in relation to objects (vehicles, window panes) – **risk of property damage!** Even at a distance over 15 m, danger cannot be ruled out.

Check that the engine is properly idling so that the cutting tool will not continue rotating after you release the throttle trigger.

Check and correct the idle speed setting at regular intervals. If the cutting attachment still rotates at idle speed, have your dealer make proper adjustments or repairs. STIHL recommends you have this work done by a STIHL servicing dealer.

Take special care in slippery conditions – **damp, snow, ice,** on slopes or uneven ground.

Watch out for obstacles: tree stumps, roots – **risk of tripping or stumbling!**

Only work while standing on the ground, never on a ladder or mobile elevated work platform.

Be particularly alert and cautious when wearing hearing protection because your ability to hear warnings (shouts, alarms, etc.) is restricted.

Take breaks when you start getting tired or feeling fatigue – **risk of accidents!**

Work calmly and carefully – in daylight conditions and only when visibility is good. Proceed with caution, do not put others in danger.

As soon as the engine is running, the power machine generates toxic exhaust gas.As soon as the engine is running, the power machine generates toxic exhaust gas. These gases may be odorless and invisible and may contain unburned hydrocarbons and benzene. Never run the engine indoors or in poorly ventilated locations, even if your model is equipped with a catalytic converter.

To reduce the risk of **serious or fatal injury from breathing toxic fumes**, ensure proper ventilation when working in trenches, hollows or other confined locations.

Stop work immediately if you start suffering from nausea, headaches, impaired vision (e.g. your field of vision gets smaller), impaired hearing, dizziness, or impaired concentration – these symptoms may possibly be the result of too-high exhaust gas concentration – **Risk of accidents!**

Operate your power tool so that it produces a minimum of noise and emissions – do not run the engine unnecessarily, accelerate the engine only when working.

To reduce the risk of fire, **do not smoke** while operating or standing near your power tool. Combustible fuel vapor may escape from the fuel system.

Dust, fumes and smoke produced while working may be hazardous to health. Wear respiratory protection in case of heavy dust or smoke emission.

If your power tool is subjected to unusually high loads for which it was not designed (e.g. heavy impact or a fall), always check that it is in good condition before continuing work – see also "Before Starting".

Check in particular that the fuel system has no leaks and the safety equipment is fully operative. Never use a power tool that is no longer safe to operate. In case of doubt, contact a dealer.

Do not operate your power tool in the starting throttle position – engine speed cannot be controlled in this position.

To **reduce the risk of injury** from ejected objects, never operate the unit without the correct deflector for the type of cutting attachment being used.

Check the work site – rocks, metal objects etc. may be caught up and ejected – possibly over a distance of 15 m – **risk of injury!** – They can also damage the cutting attachment and other property (e. g. parking vehicles, windows).

Be particularly careful when working on difficult, densely grown terrain.

When mowing in high shrubbery, under shrubbery and hedges: Hold the cutting tool at a working height of at least 15 cm – avoid risks to animals.

Always shut off the engine before leaving the unit unattended.

Examine the cutting attachment periodically at short intervals and as soon as you note any noticeable changes:
- Stop the engine, hold the machine securely, allow the cutting attachment to come to a stop
- Check condition and secure fitting; watch out for cracks
- Ensure that the cutting blades are sharp
- Replace damaged or blunt cutting attachments immediately, even in the event of minor hairline cracks

Clean grass and plant residue off the cutting attachment mounting at regular intervals – remove any accumulated material from the cutting attachment and deflector.

To **reduce the risk of injury**, shut off the engine before replacing the cutting attachment.

The gearbox gets hot during operation. Never touch the gearbox – **risk of burns!**

If a rotating cutting attachment touches a rock or another hard object, sparks can occur which may possibly ignite combustible materials. Also dried-out plants and brushwood are combustible, above all in hot and dry weather. If there is a risk of fire, do not use cutting attachments in the vicinity of combustible materials, dried-out plants or brushwood. It is mandatory that you ask the responsible forestry office about any current fire hazards.

3.8 Using mowing heads

Extend the cutting attachment deflector with the attached parts specified in the User Manual.

Only use a deflector with a properly fitted blade, which limits the mowing line to the permissible length.

For manually adjustable mowing heads, always switch off the engine before adjusting the mowing line – **risk of injury!**

Misuse with mowing lines that are too long reduces the working speed of the engine. The constant slipping of the clutch causes overheating and damage to important components (e. g. clutch, plastic housing parts) – e. g. due to the cutting attachment rotating during idling – **risk of injury!**

3.9 When using metal cutting attachments

STIHL recommends the use of original STIHL metal cutting attachments. These have been optimized for the machine and the user's requirements.

Metal cutting attachments rotate very fast, generating forces acting on the attachments and on the cuttings.

Metal cutting attachments must be sharpened in regular intervals in accordance with the instructions.

Unevenly sharpened metal cutting attachments generate an imbalance which may cause extreme loads on the machine – **risk of breakage!**

Dull or improperly sharpened cutting edges can put a higher load on the cutting attachment and increase the **risk of injury**from cracked or broken parts.

After each contact of the metal cutting attachment with hard objects (e.g. stones, rocks, metal parts), check it for damage (e.g. tears and deformation). **To reduce the risk of injury**, remove burrs and other visible accumulated material because they may become detached and be ejected at high speed during operation.

Do not continue using or attempt to repair damaged or cracked cutting attachments by means of welding, straightening or modifying the shape (unbalanced).

Particles or pieces may come off and hit the operator or a bystander at a high speed – **risk of most severe injuries!**

To reduce the above-named risks involved in operating a metal cutting attachment, ensure that the diameter of your metal cutting attachment is not too big. Also, the attachment must not be too heavy. It must be made of high-quality materials and have a suitable geometry (shape, thickness).

A metal cutting attachment not made by STIHL must not have a different weight, thickness, shape or a larger diameter than the largest STIHL metal cutting attachment approved for this metal cutting attachment – **risk of injury!**

3.10 Vibrations

Prolonged use of the power tool may result in vibration-induced circulation problems in the hands (whitefinger disease).

No general recommendation can be given for the length of usage because it depends on several factors.

The period of usage is prolonged by:
– Hand protection (wearing warm gloves)
– Work breaks

The period of usage is shortened by:
– Any personal tendency to suffer from poor circulation (symptoms: frequently cold fingers, tingling sensations).
– Low outside temperatures.
– The force with which the handles are held (a tight grip restricts circulation).

Continual and regular users should monitor closely the condition of their hands and fingers. If any of the above symptoms appear (e.g. tingling sensation in fingers), seek medical advice.

3.11 Maintenance and Repairs

Service the machine regularly. Do not attempt any maintenance or repair work not described in the instruction manual. Have all other work performed by a servicing dealer.

STIHL recommends that you have servicing and repair work carried out exclusively by an authorized STIHL servicing dealer. STIHL dealers are regularly given the opportunity to attend training courses and are supplied with the necessary technical information.

Only use high-quality replacement parts in order to avoid the risk of accidents and damage to the machine. If you have any questions in this respect, consult a servicing dealer.

STIHL recommends the use of original STIHL replacement parts. They are specifically designed to match your model and meet your performance requirements.

To reduce the risk of injury from unintentional engine startup, **always shut off the engine and disconnect the spark plug boot** before performing any repairs, maintenance or cleaning work. – Exception: Carburetor and idle speed adjustments.

Do not turn the engine over on the starter with the spark plug boot or spark plug removed since there is otherwise a **risk of fire** from uncontained sparking.

To reduce the **risk of fire**, do not service or store your machine near open flames.

Check the fuel filler cap for leaks at regular intervals.

Use only a spark plug of the type approved by STIHL and make sure it is in good condition – see "Specifications".

Inspect the ignition lead (insulation in good condition, secure connection).

Check the condition of the muffler.

To reduce the **risk of fire and damage to hearing**, do not operate your machine if the muffler is damaged or missing. –

Do not touch a hot muffler since **burn injury** will result.

Vibration behavior is influenced by the condition of the AV elements – check the AV elements at regular intervals.

3.12 Symbols on Deflectors

An **arrow** on the deflector shows the correct direction of rotation of the cutting attachments.

Some of the following symbols are applied to the outside of the deflector to indicate the approved combination of cutting attachment and deflector.

Deflector may be used with mowing heads.

Deflector must not be used with mowing heads.

Deflector may be used with grass cutting blades.

Deflector must not be used with grass cutting blades.

Deflector may be used with brush knives.

Deflector must not be used with brush knives.

Deflector must not be used with shredder blades.

Deflector must not be used with circular saw blades.

3.13 Shoulder Strap/Harness

The shoulder strap/harness is included with the machine or available as a special accessory.

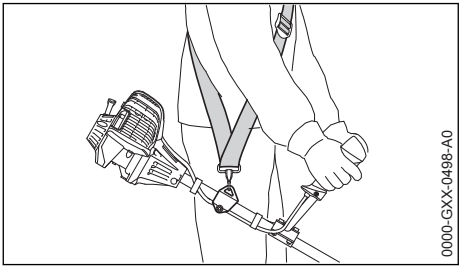

- Use the shoulder strap/harness.
- With the engine running, attach the machine to the shoulder strap/harness.

Grass cutting blades and brush knives must always be used in combination with a shoulder strap.

Circular saw blades must always be used in combination with a full harness with a quick-release system.

3.14 Mowing Head with Nylon Line

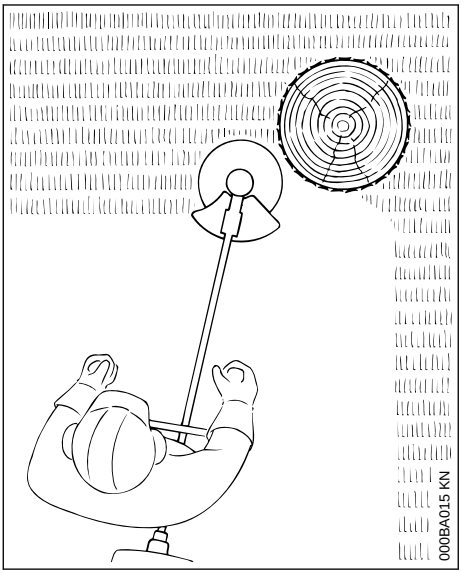

Nylon line achieves a soft cut for edging and trimming around trees, fence posts, etc. – less risk of damaging tree bark.

The mowing head comes with an instruction leaflet. Refill the mowing head with nylon line as described in the instruction leaflet.

WARNING

To reduce the risk of serious injury, never use wire or metal-reinforced line in place of the nylon line.

3.15 STIHL Polycut Mowing Head with Polymer Blades

For mowing unobstructed edges of meadows (without posts, fences, trees or similar obstacles).

Check the wear limit marks!

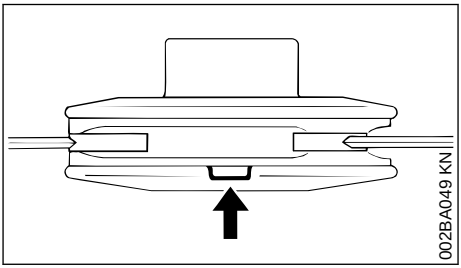

If one of the wear limit marks on the PolyCut mowing head is worn through (arrow): Do not continue using the mowing head. Install a new one. There is otherwise a **risk of injury** from thrown parts of the head.

It is important to follow the maintenance instructions for the PolyCut mowing head.

The PolyCut can also be equipped with mowing line in place of the polymer blades.

The mowing head comes with instruction leaflets. Equip the mowing head with polymers blades or nylon line as described in the instruction leaflets.

WARNING

Never use wire in place of the nylon mowing line – **risk of injury**.

3.16 Risk of Kickout (Blade Thrust) with Metal Cutting Attachments

WARNING

When using metal cutting attachments there is a risk of kickout when the rotating blade comes into contact with a solid object such as a tree trunk, branch, tree stump, rock or similar. The machine is thrown to the right or to the rear – opposite to the attachment's direction of rotation.

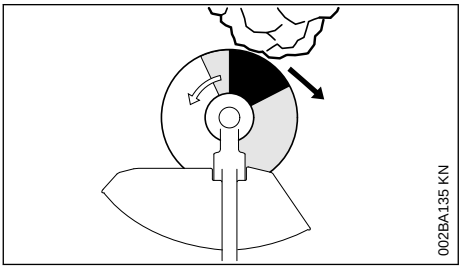

The **risk of kickout is greatest** when the **black area** of the rotating cutting attachment comes into contact with a solid object.

3.17 Grass Cutting Blade

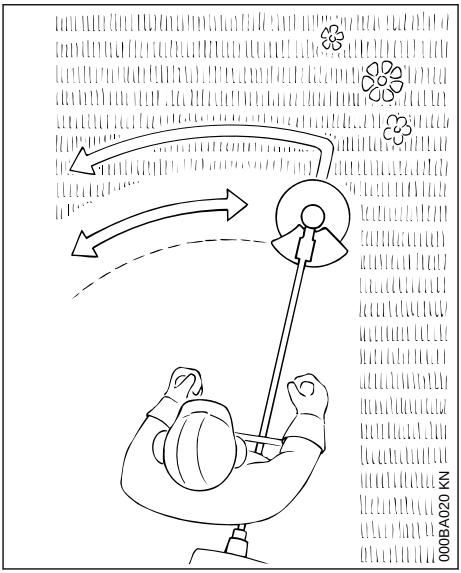

Use for grass and weeds only – sweep the brushcutter in an arc like a scythe.

WARNING

Improper use may damage the grass cutting blade – **risk of injury** from thrown parts.

Resharpen the grass cutting blade according to instructions when it has dulled noticeably.

3.18 Brush Knife

For cutting matted grass, wild growth and scrub and thinning young stands with a stem diameter of no more than 2 cm – do not cut thicker stems – **risk of accidents.**

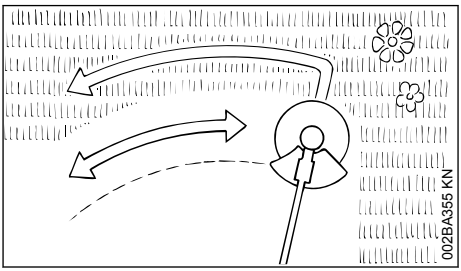

Use the brushcutter like a scythe (sweep it to the right and left) at ground level when cutting grass and thinning young stands.

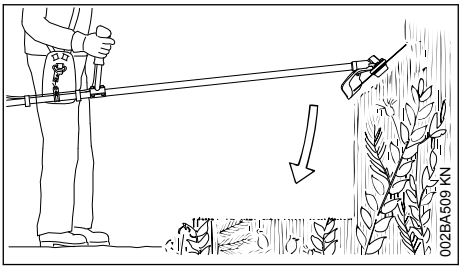

To cut wild growth and scrub, lower the brush knife down onto the growth to achieve a shredding effect – always keep the cutting attachment below hip level during this process.

Exercise extreme caution when using this method of cutting. The higher the cutting attachment is off the ground, the greater the risk of injury from cuttings being thrown sideways.

Warning! Improper use of a brush knife may cause it to crack, chip or shatter – **risk of injury** from thrown parts.

To reduce the risk of injury it is essential to take the following precautions:
- Avoid contact with stones, rocks, pieces of metal and other solid foreign objects.
- Never cut wood or shrubs with a stem diameter of more than 2 cm – use a circular saw blade for such work.
- Inspect the brush knife at regular short intervals for signs of damage. Do not continue working with a damaged brush knife.
- Resharpen the brush knife regularly and whenever it has dulled noticeably, and have it balanced if necessary (STIHL recommends a STIHL servicing dealer).

3.19 Circular Saw Blade

Suitable for cutting shrubs and trees with a maximum stem diameter of 4 cm.

Before starting the cut, accelerate the engine up to full throttle. Perform cut with uniform pressure.

Use circular saw blades only with a matching limit stop of the correct diameter.

WARNING

To reduce the risk of blade damage, avoid contact with stones and the ground. Resharpen the blade properly in good time – dull teeth may result in the blade cracking and shattering and causing serious injury.

When felling, maintain a distance of at least two tree lengths from the next felling site.

3.19.1 Risk of kickout

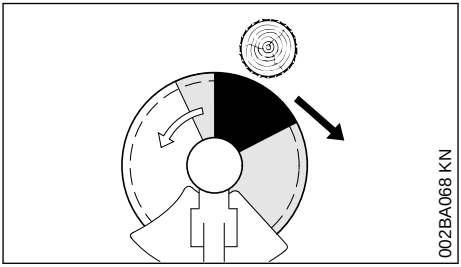

The risk of kickout is highest in the black area of the blade: Do not use this area of the circular saw blade for cutting.

There is also a risk of kickout when using the lighter shaded areas of the blade: These areas of the blade should only be used by experienced operators with specialized training.

STIHL recommends that you use the non-shaded area of the circular saw blade. Always start the cut with this area of the blade.

4 Approved Combinations of Cutting Attachment, Deflector, Handle and Harness

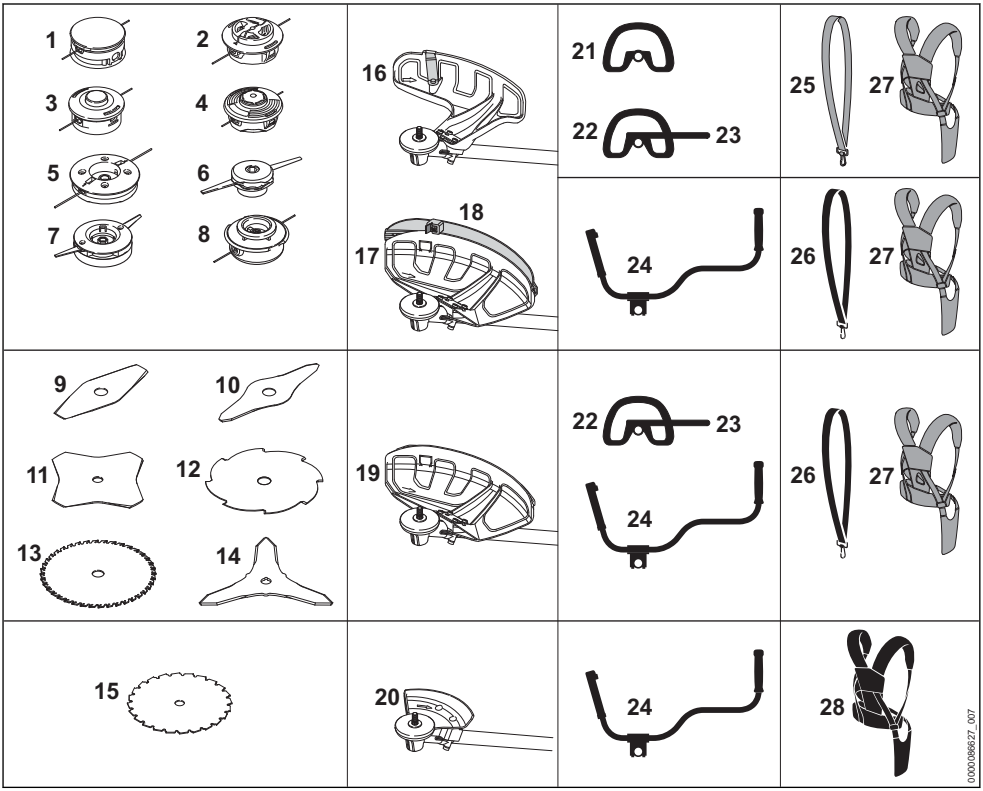

4.1 Permissible combinations

Choose the correct combination from the table depending on the cutting tool!

WARNING

For safety reasons only the cutting attachments, deflector, handle and harness versions within one line of the table may be combined with one another. No other combinations are permitted because of the **risk of accidents!**

4.2 Cutting attachments

4.2.1 Mowing heads

1 STIHL SuperCut 20-2

2 STIHL AutoCut C 26-2

3 STIHL AutoCut 25-2/AutoCut 27-2

4 STIHL AutoCut 36-2

5 STIHL DuroCut 20-2

6 STIHL PolyCut 18-2

7 STIHL PolyCut 28-2

8 STIHL TrimCut C 32-2

4.2.2 Metal cutting tools

9 Grass cutting blade 230-2 (230 mm dia.)

10 Grass cutting blade 260-2 (260 mm dia.)

11 Grass cutting blade 230-4 (230 mm dia.)

12 Grass cutting blade 230-8 (230 mm dia.)

13 Grass cutting blade 250-32

(250 mm dia.)

14 Brush knife 250-3 (250 mm dia.)

15 Circular saw blade 200-22 chisel tooth (4112), circular saw blade 200-22 HP chisel tooth (4001)

WARNING

Grass cutting blades, brush knives and circular saw blades of other, non-metal materials must not be used.

4.3 Deflectors, limit stop

16 Deflector for mowing heads

17 Deflector with

18 Skirt and blade for mowing heads

19 Deflector without skirt and blade for metal cutting attachments, items 8 to 13

20 Limit stop for circular saw blades

4.4 Handles

21 Loop handle

22 Loop handle with

23 Barrier bar

24 Bike handle

4.5 Shoulder straps

25 Shoulder strap can be used

26 Shoulder strap must be used

27 Full harness can be used

28 Full harness must be used

5 Approved Power Tool Attachments

The following STIHL attachments may be used with the basic power tool:

Attachment	Application
BF	Cultivator
HL 145° [1]	Long reach hedge trimmer
HT [1]	Pole pruner
RG [3]	Weeder
SP [1] [2]	Special harvester

[1] Not approved for bike-handled machines

[2] Use handle hose supplied with the machine

[3] Use barrier bar on loop-handled machines

6 Mounting the Bike Handle

6.1 Mounting Bike Handle with Swiveling Handle Support

The machine is supplied with the swiveling handle support already mounted on the shaft. To mount the handlebar it is necessary to remove the clamp moldings.

6.1.1 Removing the Clamp Moldings

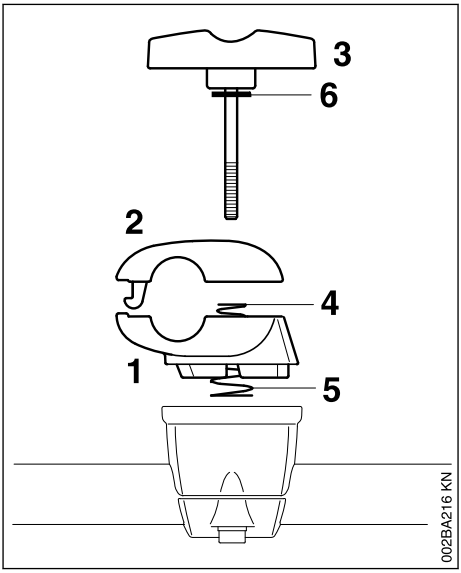

- Hold the lower clamp (1) and upper clamp (2) firmly together.
- Release the wing screw (3) – the clamps are loose once the wing screw has been released. They are pushed apart by the two springs (4 and 5).
- Pull out the wing screw – the washer (6) remains on the wing screw.
- Separate the clamp moldings – the springs (4 and 5) remain in the lower clamp.

6.1.2 Securing the Handlebar

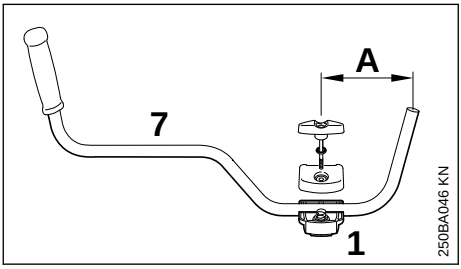

- Place the handlebar (7) in the lower clamp (1) so that distance A is no more than 15 cm (6 in).
- Place the upper clamp in position and hold both clamp moldings together.
- Push the wing screw through the two clamps as far as stop – hold all parts together and secure them.

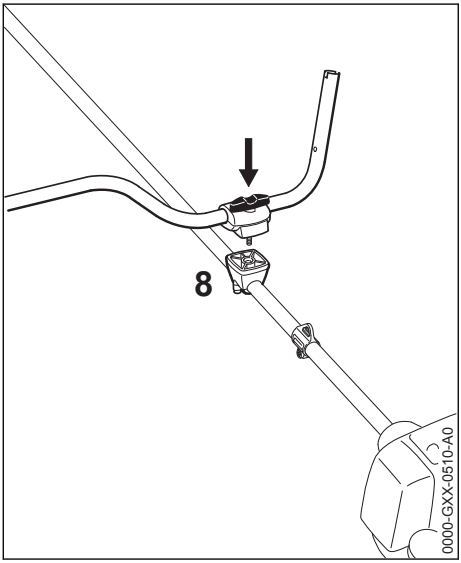

- Place the secured assembly on the handle support (8) with the wing screw at the side nearest the engine.
- Push the wing screw into the handle support as far as stop and then screw it down – but do not finally tighten yet.
- Line up the handlebar at a right angle to the drive tube – check distance A again.
- Tighten down the wing screw firmly.

6.1.3 Mounting the Control Handle

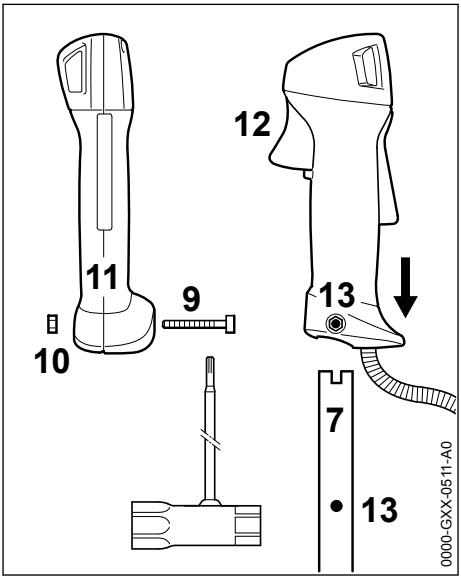

- Take out the screw (9) – the nut (10) remains in the control handle (11).
- Push the control handle onto the handlebar (7) until the holes (13) line up – the throttle trigger (12) must point towards the gearbox.
- Insert the screw (9) and tighten it down firmly.

6.1.4 Fitting the Throttle Cable

NOTICE

Do not kink the throttle cable or lay it in tight radii – make sure the throttle trigger moves freely.

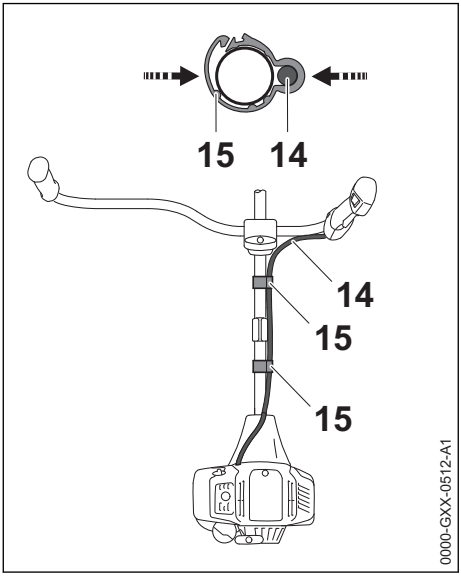

- Position the clamp (15) and handle support (14) against the drive tube.
- Close the throttle cable retainer (15). The retainer (15) snaps into place.

6.1.5 Adjusting the Throttle Cable

- Check adjustment of throttle cable – see chapter on "Adjusting the Throttle Cable".

6.1.6 Swiveling the Handlebar

Transport position

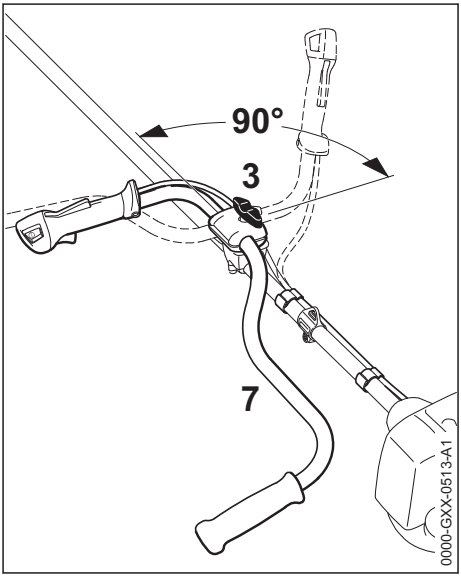

- Loosen the wing screw (3) and unscrew it until the handlebar (7) can be rotated.
- Rotate the handlebar 90° counterclockwise and then swing the handles down.
- Tighten down the wing screw (3) firmly.

Working position

- Reverse the sequence described above to swing the handles up and turn the handlebar clockwise.

7 Mounting the Loop Handle

7.1 Mounting Loop Handle with Barrier Bar

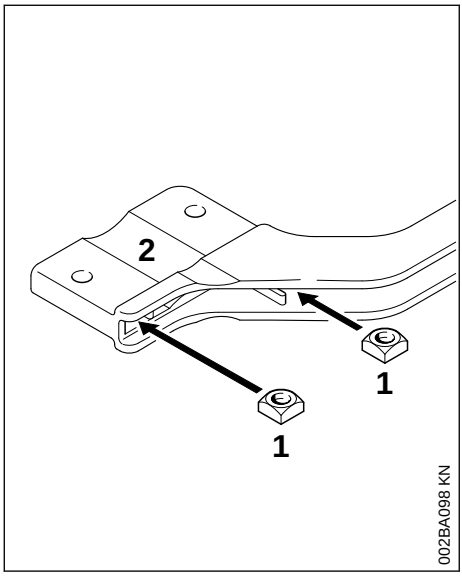

- Fit the square nuts (1) in the barrier bar (2); the holes must line up.

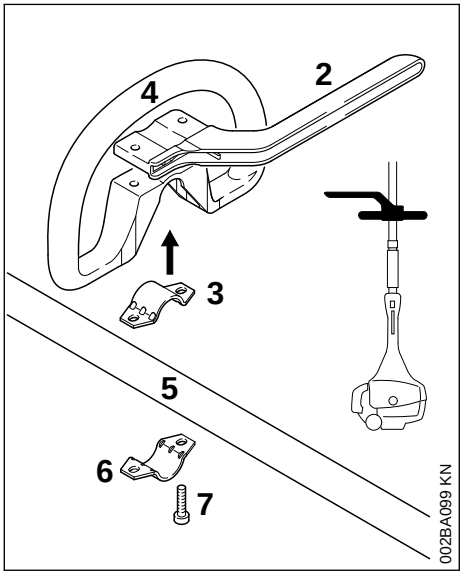

- Place the clamp (3) in the loop handle (4) and position them both against the drive tube (5).
- Position the clamp (6) against the drive tube.
- Place the barrier bar (2) in position as shown.
- Line up the holes.
- Insert the screws (7) in the holes and screw them into the barrier bar (2) as far as stop.
- Go to "Securing the Loop Handle".

7.2 Mounting the Loop Handle without Barrier Bar

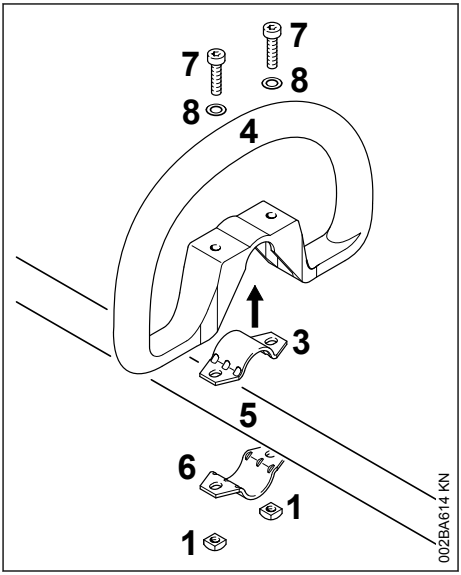

- Place the clamp (3) in the loop handle (4) and position them both against the drive tube (5).
- Position the clamp (6) against the drive tube.
- Line up the holes.
- Fit washers (8) on the screws (7) and insert the screws in the holes. Fit the square nuts (1) and screw them down as far as stop.
- Go to "Securing the Loop Handle".

7.3 Securing the Loop Handle

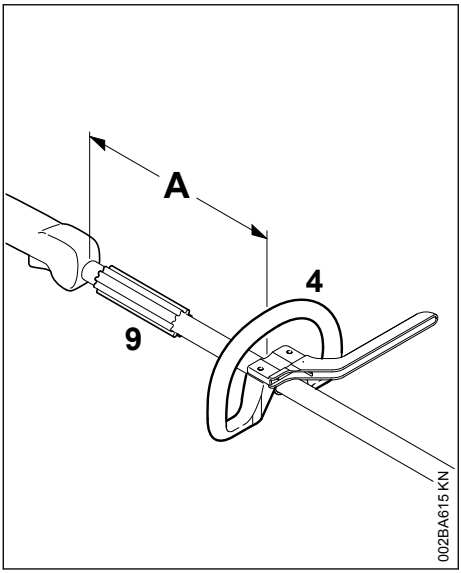

The loop handle can be adjusted to suit the height and reach of the operator and the application by changing distance (A).

Recommendation: distance (A): about 20 cm (8 in)

- Slide the handle to the required position.
- Line up the loop handle (4).
- Tighten down the screws until the loop handle can no longer be rotated on the drive tube. If no barrier bar is fitted – lock the nuts if necessary.

The sleeve (9) (not fitted on all models) must be between the loop handle and the control handle.

8 Adjusting the Throttle Cable

It may be necessary to correct the adjustment of the throttle cable after assembling the machine or after a prolonged period of operation.

Adjust the throttle cable only when the unit is completely and properly assembled.

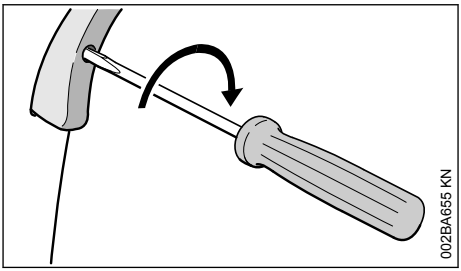

- Set the throttle trigger to the full throttle position.
- Carefully rotate the screw in the throttle trigger in the direction of the arrow until you feel initial resistance. Then rotate it another half turn in the same direction.

9 Fitting the Carrying Ring

9.1 Polymer Version

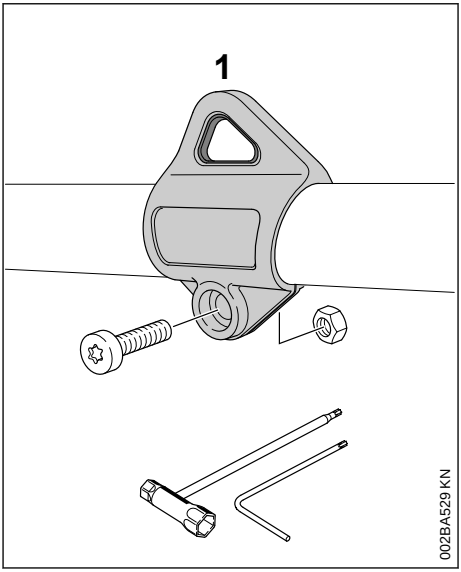

For position of carrying ring see "Main Parts".

- Push the carrying ring (1) over the drive tube.
- Insert the M5 nut in the hex recess in the carrying ring.
- Fit the M5x14 screw.
- Line up the carrying ring.
- Tighten down the screw firmly.

10 Mounting the deflector

10.1 Mounting the Deflector

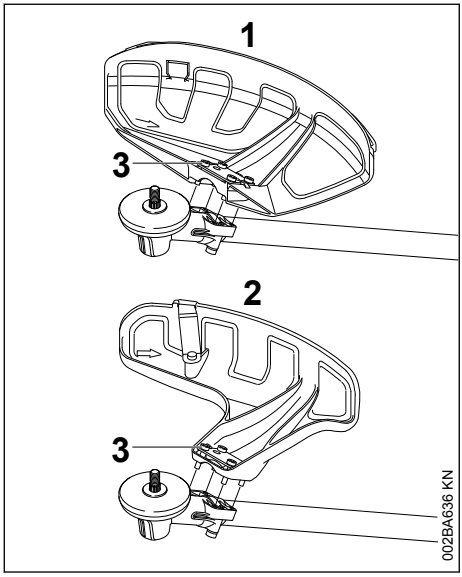

1 Deflector for mowing attachments

2 Deflector for mowing heads

Deflectors (1 and 2) are both mounted to the gearbox in the same way.

- Place the deflector on the gearbox flange.
- Insert the screws (3) and tighten them down firmly.

10.2 Fitting the Skirt and Blade

WARNING

Risk of injury from thrown objects and contact with the cutting attachment. These parts must be fitted to the deflector (**1**) when you use a mowing head.

10.3 Fitting the Skirt

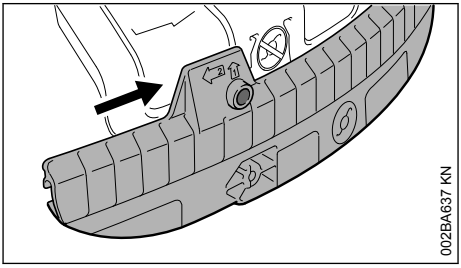

- Slide the lower guide slot of the skirt onto the deflector – it must snap into position.

10.4 Removing the Skirt

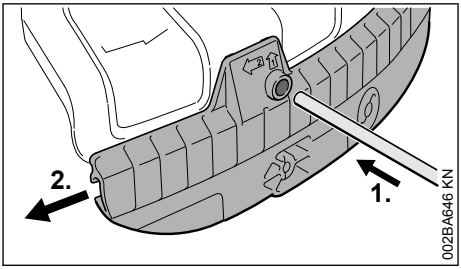

- Insert the stop pin into the hole in the skirt and use it to push the skirt to the left.
- Pull the skirt off the deflector.

10.5 Mounting the Blade

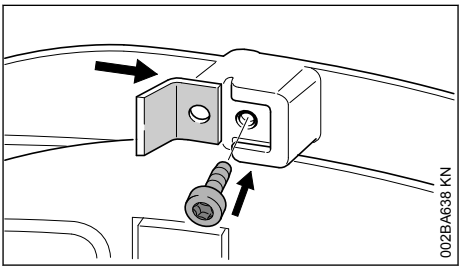

- Slide the line limiting blade into the guide on the skirt.
- Insert the screw and tighten it down firmly.

10.6 Mounting the Limit Stop

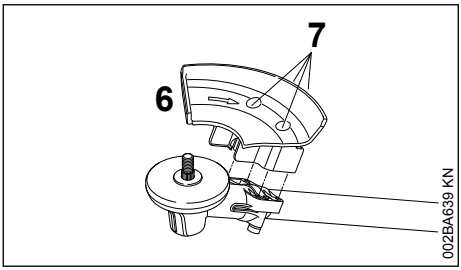

WARNING

Risk of injury from thrown objects and contact with the cutting attachment. Always fit the limit stop (6) when you use a circular saw blade.

- Position the limit stop (6) on the gearbox flange.
- Insert the screws (7) and tighten them down firmly.

11 Mounting the Cutting Attachment

11.1 Placing power tool on the ground

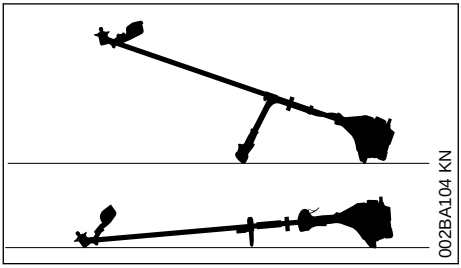

- Shut off the engine.
- Lay your power tool on its back so that the cutting attachment mounting face is pointing up.

11.2 Mounting Hardware for Cutting Attachments

The mounting hardware supplied depends on the cutting attachment that comes as original equipment with the new machine.

11.2.1 Machine supplied with mounting hardware

Mowing heads and metal cutting attachments may be mounted.

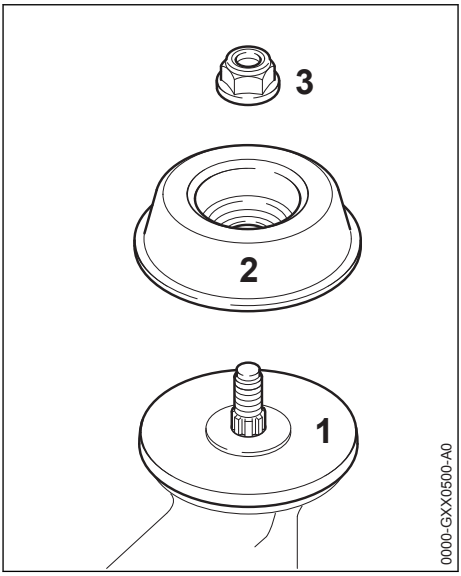

Depending on the cutting attachment, it may be necessary to use the nut (3) and rider plate (2). The thrust plate (1) must be used with all cutting attachments.

These parts are included in a kit supplied with the machine and are also available as special accessories.

11.2.2 Machine supplied without mounting hardware

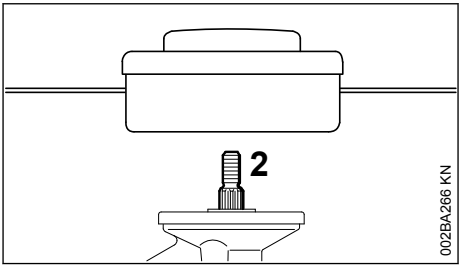

Only mowing heads may be used which mount directly to the shaft (2).

11.3 Blocking the Shaft

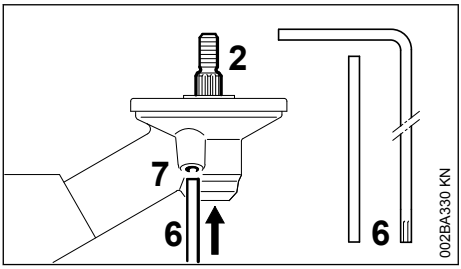

The output shaft (2) must be blocked with the stop pin (6) or screwdriver (6) to mount or remove cutting attachments. These parts come standard with the machine or are available as special accessories.

- Insert the stop pin (6) or screwdriver (6) in the hole (7) in the gearbox as far as stop – and apply slight pressure.
- Rotate shaft, nut or cutting attachment until the stop pin slips into position and blocks the shaft.

11.4 Removing the Mounting Hardware

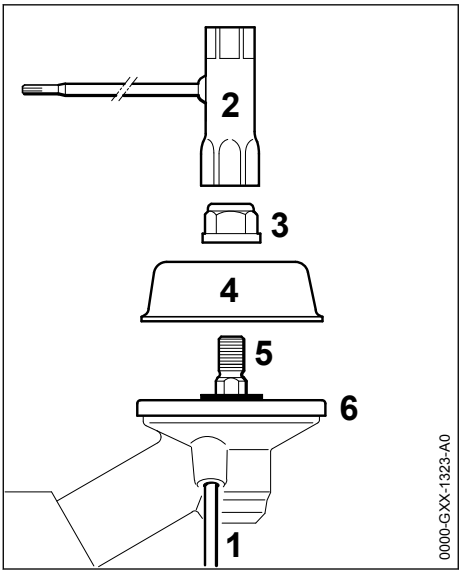

- Block the shaft (5) with the stop pin (1).
- Use the combination wrench (2) to loosen and remove the nut (3) clockwise (left-hand thread).
- Take the rider plate (4) off the shaft (5). Do not remove the thrust plate (6).

11.5 Mounting the Cutting Attachment

WARNING

Risk of injury from thrown objects and contact with the cutting attachment. Use a deflector that matches the cutting attachment – see "Mounting the Deflector".

11.6 Fitting Mowing Head with Screw Mounting

Keep the instruction leaflet for the mowing head in a safe place.

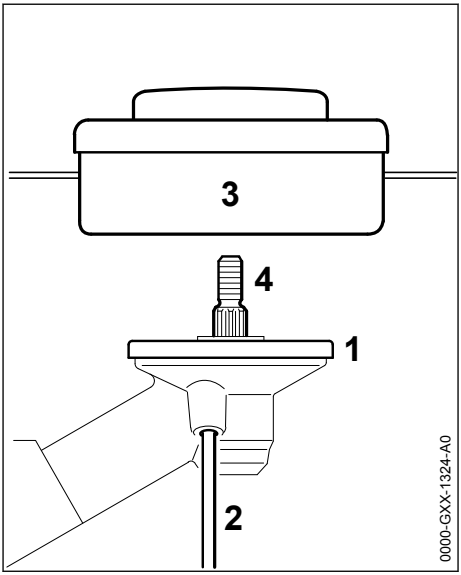

- Fit the thrust plate (1).
- Screw the mowing head (3) counterclockwise on to the shaft (4) as far as stop.
- Block the shaft (4) with the stop pin (2).
- Tighten down the mowing head (3) firmly.

NOTICE

Remove the tool used to block the shaft.

11.7 Remove the mowing head.

- Block the shaft (4) with the stop pin (2).
- Unscrew and remove the mowing head (3) clockwise.

11.8 Mounting Metal Cutting Attachments

Keep the leaflet and packaging of the metal cutting attachment in a safe place.

WARNING

Wear protective gloves to reduce the risk of direct contact with the sharp cutting edges.

Mount only one metal cutting attachment.

Check direction of rotation of cutting attachment

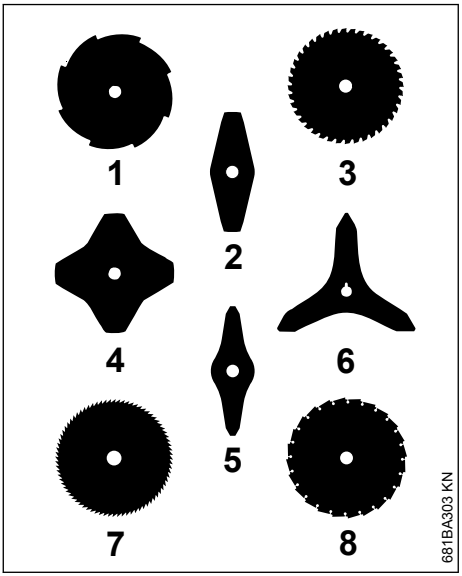

Cutting attachments 2, 4, 5 and 6 may be mounted either way round – they must be turned over regularly to help avoid one-sided wear.

The cutting edges of cutting attachments 1, 3, 7 and 8 must point clockwise.

Direction of rotation is indicated by an arrow on the inside of the deflector.

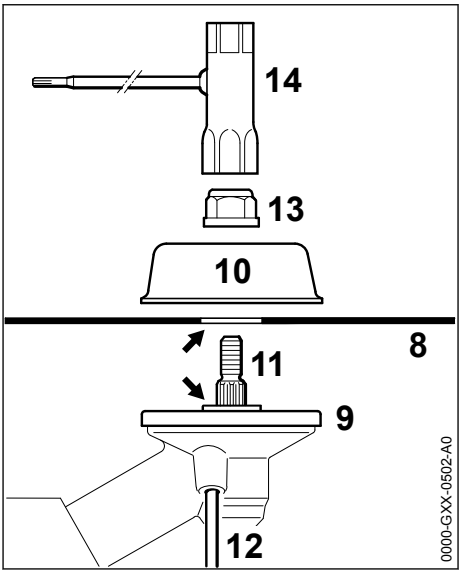

- Fit the thrust plate (9).
- Place the cutting attachment (8) on the thrust plate (9).

Collar (see arrow) must engage the cutting attachment's mounting hole.

Securing the cutting attachment

- Fit the rider plate (10).
- Block the shaft (11) with the stop pin (12).
- Use the combination wrench (14) to screw the mounting nut (13) on to the output shaft counterclockwise and tighten it down firmly.

WARNING

There is a risk of injury if the cutting attachment works loose. If the mounting nut has become too loose, fit a new one.

NOTICE

Remove the tool used to block the shaft.

11.9 Removing the Metal Cutting Attachment

WARNING

Wear protective gloves to reduce the risk of direct contact with the sharp cutting edges.

- Block the shaft (11) with the stop pin (12).
- Unscrew the mounting nut (13) clockwise.

- Remove cutting attachment and its mounting hardware from the gearbox – but **do not** remove the thrust plate (9).

12 Fuel

The engine requires a mixture of gasoline and engine oil.

WARNING

Avoid direct skin contact with fuel and breathing in of gasoline fumes.

12.1 STIHL MotoMix

STIHL recommends using STIHL MotoMix. This pre-blended fuel is free of benzene and lead, is distinguished by a high octane rating, and always provides the proper mixing ratio.

STIHL MotoMix uses STIHL HP Ultra two-stroke engine oil for optimum engine life.

MotoMix is not available in all markets.

12.2 Mixing fuel

NOTICE

Unsuitable fuels or a mixing ratio that deviates from the specification can lead to severe engine damage. The engine, seals, fuel lines and fuel tank may be damaged if low-quality gasoline or engine oil is used.

12.2.1 Gasoline

Use only **high-quality gasoline** with an octane rating of at least 90 ROC – leaded or unleaded.

Gasoline with an alcohol component exceeding 10% can cause impaired engine performance in engines with manually adjustable carburetors and thus should not be used in these engines.

Engines with M-Tronic deliver full engine performance using gasoline with an alcohol component of up to 27% (E27).

12.2.2 Engine oil

If you mix the fuel yourself, use only STIHL two-stroke engine oil or another high-performance engine oil classified as JASO FB, JASO FC, JASO FD, ISO-L-EGB, ISO-L-EGC or ISO-L-EGD.

STIHL specifies STIHL HP Ultra two-stroke engine oil or an equivalent high-performance engine oil in order to maintain emission limits over the machine's service life.

12.2.3 Mixing ratio

with STIHL two-stroke engine oil 1:50; 1:50 = 1 part oil + 50 parts gasoline

12.2.4 Examples

Quantity of gasoline	STIHL two-stroke engine oil 1:50	
Liters	Liters	(ml)
1	0.02	(20)
5	0.10	(100)
10	0.20	(200)
15	0.30	(300)
20	0.40	(400)
25	0.50	(500)

- Pour oil into an approved safety fuel canister first, then add gasoline and mix thoroughly

12.3 Storing fuel mixture

Store in approved safety fuel canisters only in a dry, cool and secure place protected against light and sunlight.

Fuel mixture deteriorates with age – mix only as much as needed for a few weeks. Do not store fuel mixture for longer than 30 days. The fuel mixture can become unusable more quickly if exposed to light, sunlight or low or high temperatures.

STIHL MotoMix however can be stored for up to 5 years without any problems.

- Shake the canister containing the fuel mixture thoroughly before refueling

WARNING

Pressure may have built up in the canister – open it carefully.

- The fuel tank and the canister in which fuel mixture is stored should be cleaned thoroughly from time to time

Residual fuel and the liquid used for cleaning must be disposed of in accordance with regulations and without harming the environment!

13 Fueling

13.1 Preparations

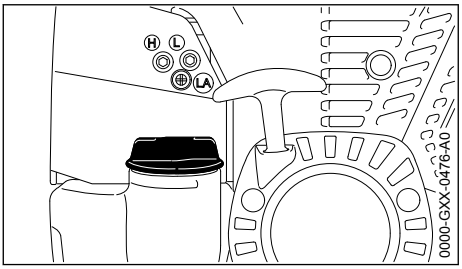

- Before fueling, clean the filler cap and the area around it to ensure that no dirt falls into the tank.
- Position the machine so that the tank cap faces up.

13.2 Opening the Tank Cap

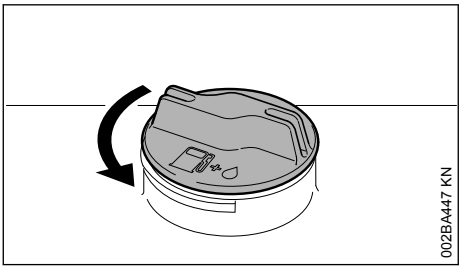

- Turn the cap counterclockwise until it can be removed from the tank opening.
- Remove the tank cap.

13.3 Filling Up with Fuel

Take care not to spill fuel while fueling and do not overfill the tank.

STIHL recommends you use the STIHL filler nozzle for fuel (special accessory).

- Fill up with fuel.

13.4 Closing the Tank Cap

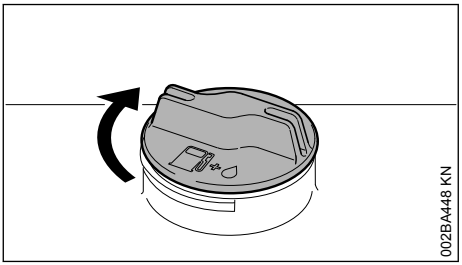

- Place the cap in the opening.
- Turn the cap clockwise as far as stop and tighten it down as firmly as possible by hand.

14 Fitting the Harness

The type and style of the harness/shoulder strap depend on the market.

The use of the shoulder strap is described in the chapter on "Approved Combinations of Cutting Attachment, Deflector, Handle and Harness".

14.1 Shoulder Strap

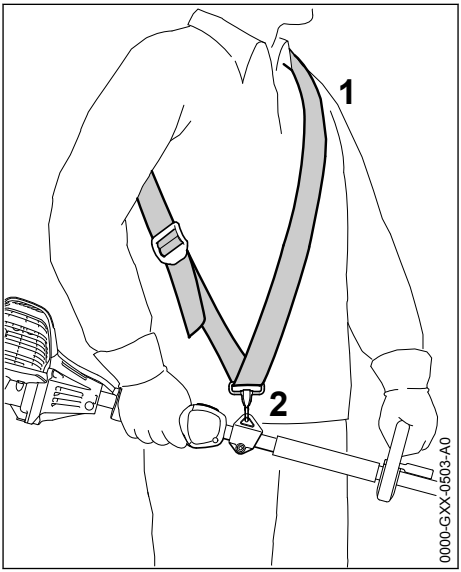

- Put on the shoulder strap (1).
- Adjust the length of the strap so that the carabiner (2) is about a hand’s width below your right hip.
- Balance the machine – see "Balancing the Machine".

14.2 Full Harness

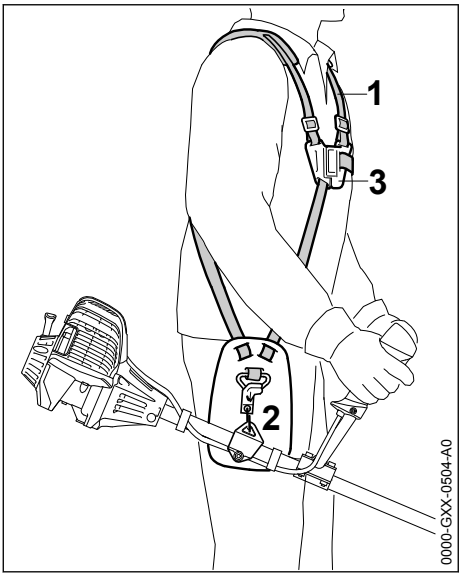

- Put on the harness (1) and close the locking plate (3).
- Adjust the length of the strap – with the machine attached, the carabiner (2) must be about a hand's width below your right hip.
- Balance the machine – see "Balancing the Machine".

15 Balancing the Machine

15.1 Attaching Machine to Harness

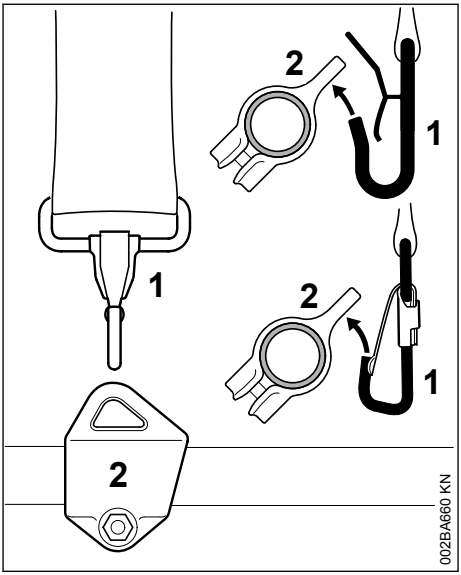

The type and style of the shoulder strap and carabiner depend on the market.

- Attach the carabiner (1) to the carrying ring (2) on the drive tube.

15.2 Balancing the Machine

The unit is balanced differently depending on the cutting attachment used.

Proceed as follows until the conditions specified under "Floating positions" have been met:

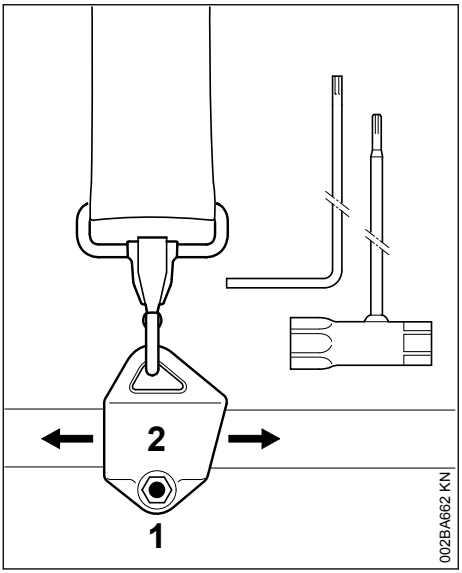

- Loosen the screw (1).
- Slide the carrying ring (2) along the drive tube.
- Tighten the screw (1) moderately.
- Allow the unit to hang freely.
- Check the position obtained:

Balanced positions

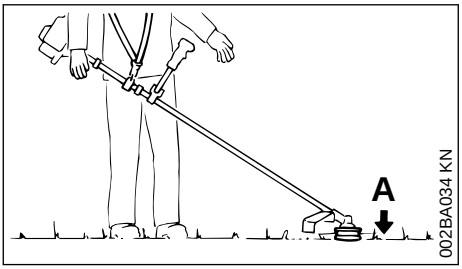

Mowing tools (A) such as mowing heads, grass cutting blades and brush knives
- should just touch the ground.

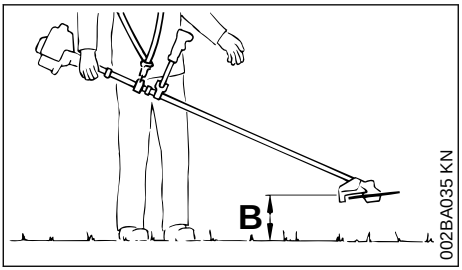

Circular saw blades (B)
- should "hover" about 20 cm (8 in) above the ground.

When the correct balanced position has been reached:
- Tighten down the screw (1) on the carrying ring firmly.

15.3 Disconnecting Machine from Harness

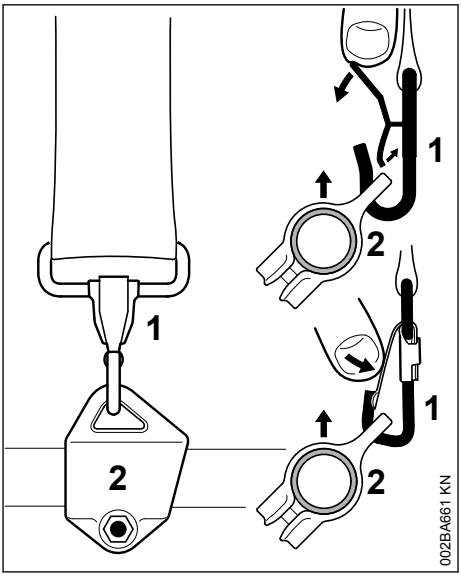

- Press down the bar on the carabiner (1) and pull the carrying ring (2) out of the carabiner.

16 Starting / Stopping the Engine

16.1 Controls

16.1.1 Version with Bike Handle

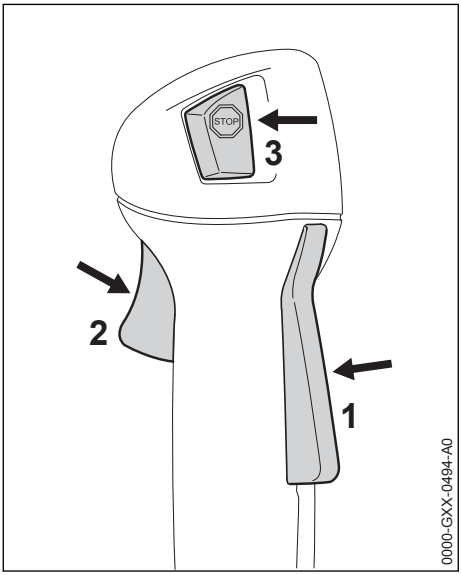

1 Throttle trigger lockout
2 Throttle trigger
3 Stop switch with Run and Stop positions. Depress the stop switch (⊖) to switch off the ignition – see "Function of stop switch and ignition system".

16.1.2 Version with Loop Handle

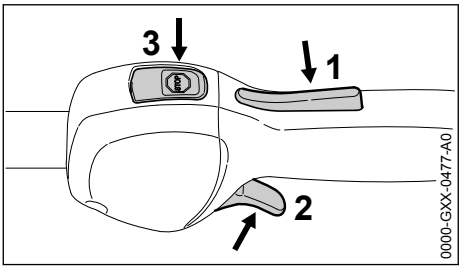

1 Throttle trigger lockout
2 Throttle trigger
3 Stop switch with Run and Stop positions. Depress the stop switch (⊖) to switch off the ignition – see "Function of stop switch and ignition system".

16.1.3 Function of stop switch and ignition system

The ignition is switched off and the engine stopped when the stop switch is pressed. The stop switch returns automatically to the **Run** position when it is released: The ignition is switched on again after the engine stops – the engine is then ready to start.

16.2 Starting the Engine

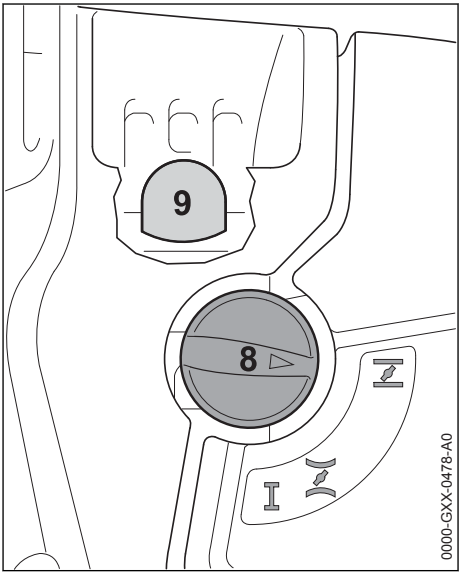

- Press the manual fuel pump bulb (9) at least five times – even if the bulb is already filled with fuel.
- Press in the choke knob (8) and turn it to the position that suits the engine temperature:

if the engine is cold
for warm start – also use this position if the engine has been running but is still cold.

The choke knob must engage in position.

16.2.1 Cranking

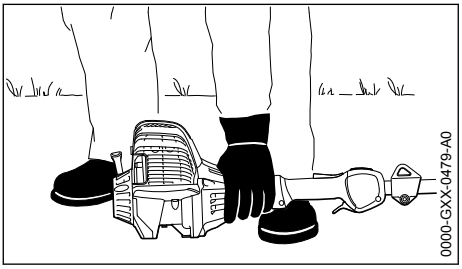

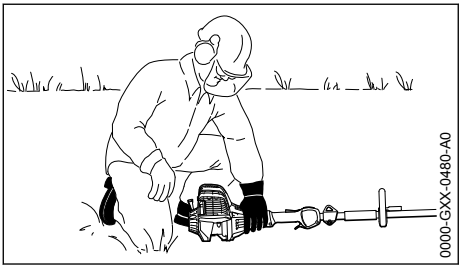

- Place the unit on the ground: It must rest securely on the engine support and the deflector.
- If fitted: Remove the transport guard from the cutting attachment.

To reduce the risk of accidents, check that the cutting attachment is not touching the ground of any other obstacles.

- Make sure you have a firm footing, either standing, stooping or kneeling.
- Hold the unit **firmly** on the ground with your left hand and press down – do not touch the throttle trigger or lockout lever – your thumb should be under the fan housing.

NOTICE

Do not stand or kneel on the drive tube.

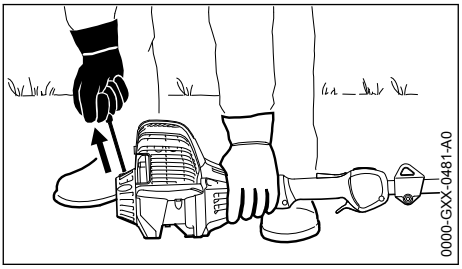

- Hold the starter grip with your right hand.
- Pull the starter grip slowly until you feel it engage and then give it a brisk strong pull.

NOTICE

Do not pull out the starter rope all the way – **it might otherwise break**.

- Do not let the starter grip snap back. Guide it slowly back into the housing so that the starter rope can rewind properly.
- Continue cranking until the engine runs.

16.2.2 As soon as the engine runs

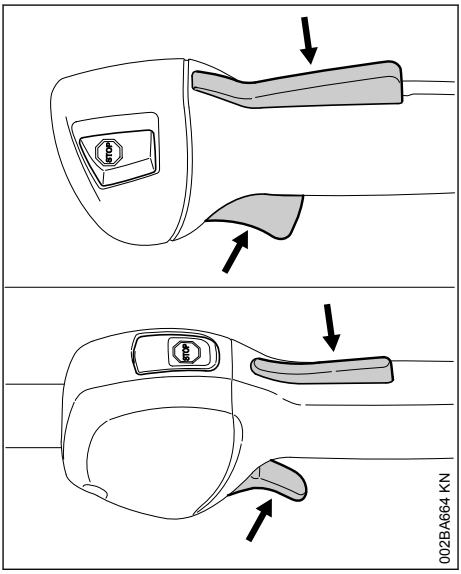

- Press down the throttle trigger lockout and open the throttle – the choke knob moves to the run position I. After a cold start, warm up the engine by opening the throttle several times.

WARNING

There is a risk of injury if the cutting attachment runs when the engine is idling. Adjust the carburetor so that the cutting attachment does not run when the engine is idling – see “Adjusting the Carburetor”.

Your machine is now ready for operation.

16.3 Stopping the Engine

- Depress the momentary contact stop switch – the engine stops – release the stop switch – it springs back to the run position.

16.4 Other Hints on Starting

Engine stalls in cold start position ⌶ or under acceleration.

- Move the choke knob to ⌶ and continue cranking until the engine runs.

Engine does not start in warm start position ⌶

- Move the choke knob to ⌶ and continue cranking until the engine runs.

If the engine does not start

- Check that all settings are correct.
- Check that there is fuel in the tank and refuel if necessary.
- Check that the spark plug boot is properly connected.
- Repeat the starting procedure.

Engine is flooded

- Move the choke knob to I and continue cranking until the engine runs.

Fuel tank run until completely dry

- After refueling, press the manual fuel pump bulb at least five times – even if the bulb is already filled with fuel.
- Set the choke lever to suit the engine temperature.
- Now start the engine.

17 Transporting the Unit

17.1 Using Transport Guard

The type of transport guard depends on the metal cutting attachment supplied with the machine. Transport guards are available as special accessories.

17.2 230 mm Grass Cutting Blades

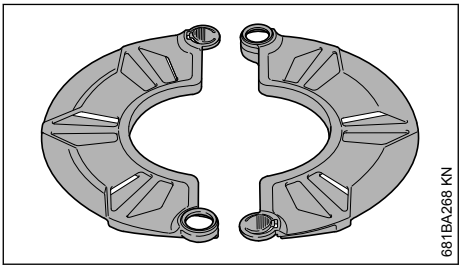

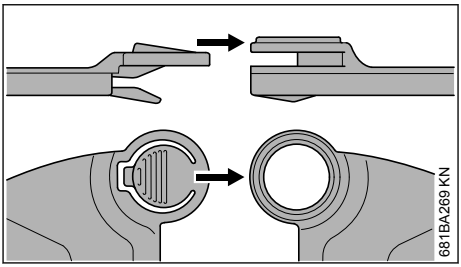

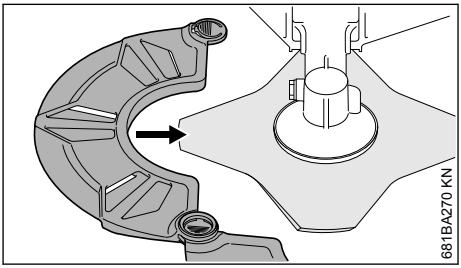

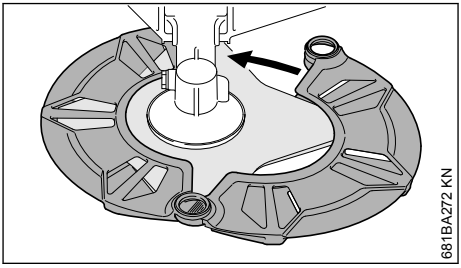

17.3 250 mm Brush Knives

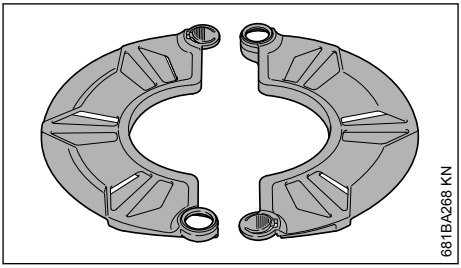

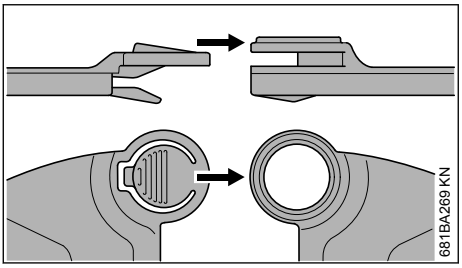

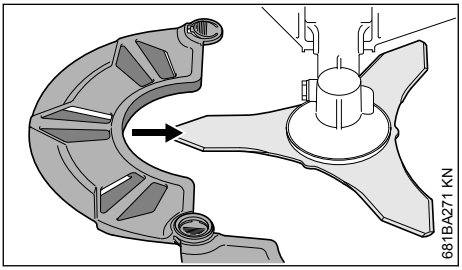

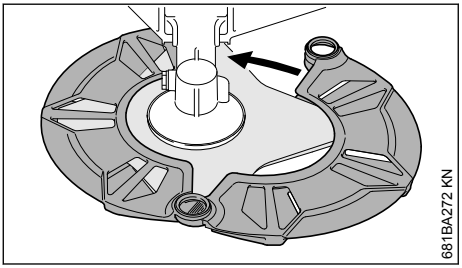

17.4 Grass Cutting Blades up to 260 mm

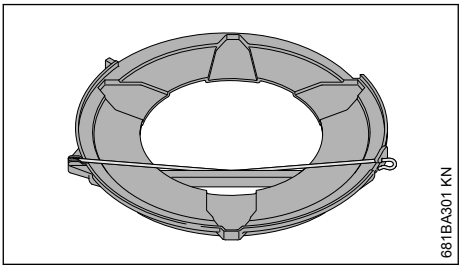

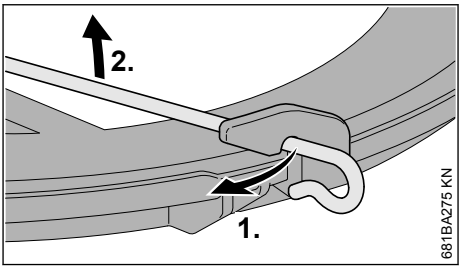

- Disconnect wire rod from the transport guard.
- Swing wire rod outwards.

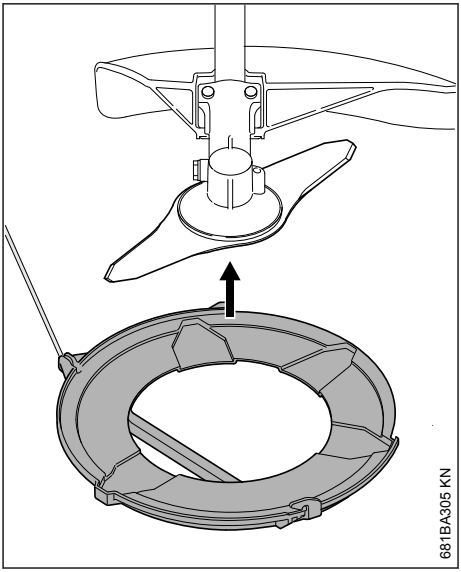

- Fit the transport guard on the cutting attachment from below.

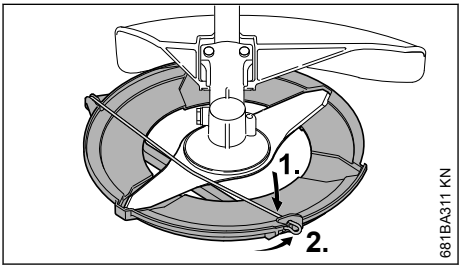

- Swing wire rod into position.
- Hook wire rod to the transport guard.

17.5 Circular Saw Blades

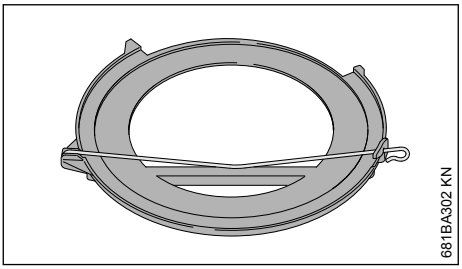

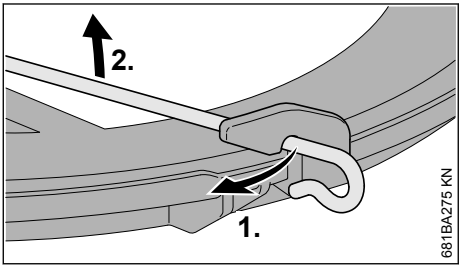

- Disconnect wire rod from the transport guard.

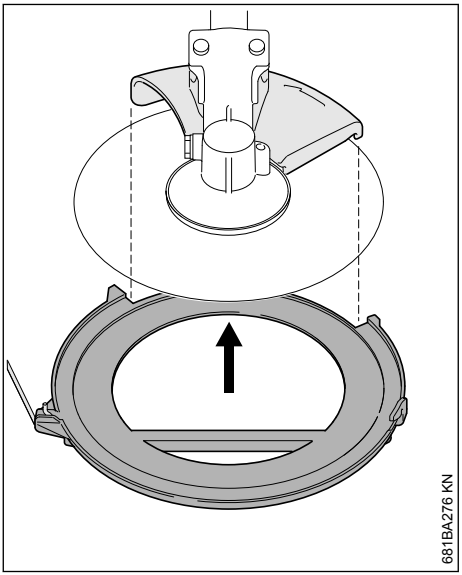

- Swing wire rod outwards.
- Fit transport guard on saw blade from below, making sure the limit stop is properly seated in the recess.

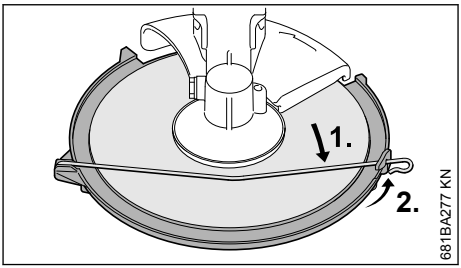

- Swing wire rod into position.
- Hook wire rod to the transport guard.

18 Operating Instructions

18.1 During break-in period

A factory-new machine should not be run at high revs (full throttle off load) for the first three tank fillings. This avoids unnecessary high loads during the break-in period. As all moving parts have to bed in during the break-in period, the frictional resistances in the engine are greater during this period. The engine develops its maximum power after about 5 to 15 tank fillings.

18.2 During Operation

After a long period of full throttle operation, allow the engine to run for a short while at idle speed so that engine heat can be dissipated by the flow of cooling air. This protects engine-mounted components (ignition, carburetor) from thermal overload.

18.3 After Finishing Work

Storing for a short period: Wait for the engine to cool down. Empty the fuel tank and keep the machine in a dry place, well away from sources of ignition, until you need it again. For longer out-of-service periods – see "Storing the Machine".

19 Replacing the Air Filter

Filters have an average life of more than a year. Do not remove the filter cover or replace the air filter as long as there is no noticeable loss of power.

19.1 If there is a noticeable loss of engine power

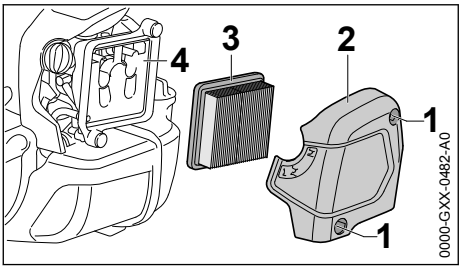

- Turn the choke knob to ⊥.
- Loosen the screws (1).
- Remove the filter cover (2).
- Clean away loose dirt from around the filter.
- Remove the filter element (3).
- Replace dirty or damaged filter element (3).
- Replace any damaged parts.

19.2 Installing the Filter Element

- Install the filter element (3) in the filter housing and fit the cover.
- Insert the screws (1) and tighten them down firmly.

20 Adjusting the Carburetor

The carburetor has been set at the factory to provide an optimum fuel-air mixture under most operating conditions.

20.1 Adjusting Idle Speed

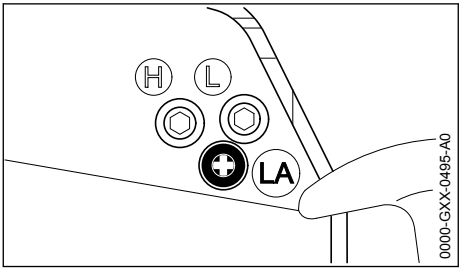

Engine stops while idling

- Warm up the engine for about 3 minutes.
- Turn the idle speed screw (LA) slowly clockwise until the engine runs smoothly – the cutting attachment must not run.

Cutting attachment runs when engine is idling

- Turn the idle speed screw (LA) slowly counterclockwise until the cutting attachment stops running and then turn the screw about another 1/2 to 3/4 turn in the same direction.

WARNING

If the cutting attachment continues to run when the engine is idling, have your machine checked and repaired by your servicing dealer.

21 Spark Plug

- If the engine is down on power, difficult to start or runs poorly at idle speed, first check the spark plug.
- Fit a new spark plug after about 100 operating hours – or sooner if the electrodes are badly eroded. Install only suppressed spark plugs of the type approved by STIHL – see "Specifications".

21.1 Removing the Spark Plug

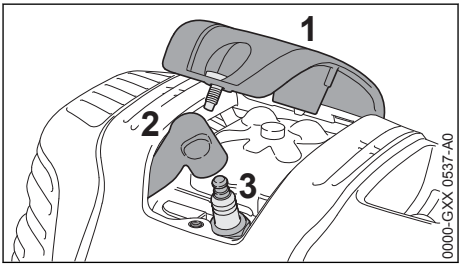

- Remove the cover (1).
- Pull off the spark plug boot (2).
- Unscrew the spark plug (3).

21.2 Checking the Spark Plug

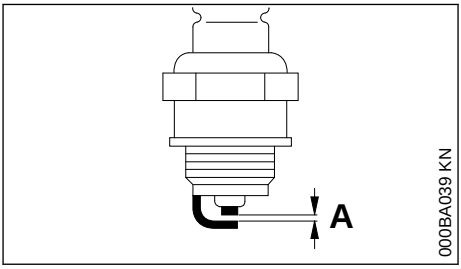

- Clean dirty spark plug.
- Check electrode gap (A) and readjust if necessary – see "Specifications".
- Rectify the problems which have caused fouling of the spark plug.

Possible causes are:
– Too much oil in fuel mix.
– Dirty air filter.
– Unfavorable running conditions.

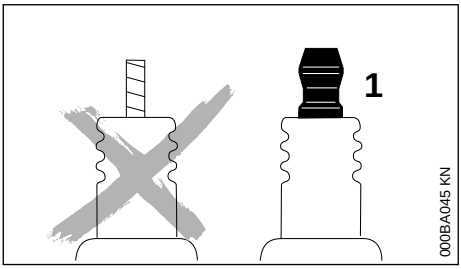

WARNING

Arcing may occur if the adapter nut (1) is loose or missing. Working in an easily combustible or explosive atmosphere may cause a fire or an explosion. This can result result in serious injuries or damage to property.

- Use resistor type spark plugs with a properly tightened adapter nut.

21.3 Installing the Spark Plug

- Screw the spark plug (3) into the cylinder.
- Tighten down the spark plug (3) with the combination wrench.
- Press the boot (2) firmly onto the spark plug.
- Fit the cover (1) and screw it down firmly.

22 Engine Running Behavior

If engine running behavior is unsatisfactory even though the air filter is clean and the carburetor is properly adjusted, the cause may be the muffler.

Have the muffler checked for contamination (carbonization) by your servicing dealer.

STIHL recommends that you have servicing and repair work carried out exclusively by an authorized STIHL servicing dealer.

23 Lubricating the Gearbox

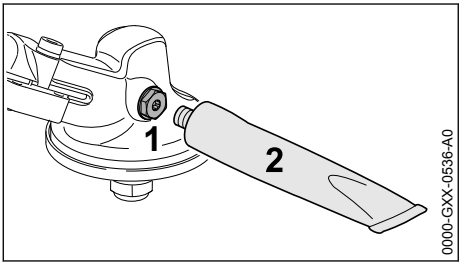

Check grease level after every 25 hours of operation and re-lubricate if necessary.

- Remove the screw plug (1).
- If no grease can be seen on the inside of the screw plug (1): Screw the tube (2) of STIHL gear lubricant (special accessory) into the filler hole.
- Squeeze no more than 5 g (1/5 oz) grease into the gearbox.

NOTICE

Do not completely fill the gearbox with grease.

- Unscrew the tube (2).
- Insert the screw plug (1) and tighten it down firmly.

24 Storing the Machine

If out of use for periods of about 30 days or longer

- Drain and clean the fuel tank in a well-ventilated area.
- Dispose of fuel properly in accordance with local environmental requirements.
- If a manual fuel pump is fitted: Press the manual fuel pump at least 5 times.
- Start the engine and run it at idling speed until it stops
- Remove, clean and inspect the cutting attachment. Treat metal cutting attachments with protective oil.
- Thoroughly clean the machine
- Cleaning the Air Filter
- Store the machine in a dry and safe place, out of the reach of children and other unauthorized users

25 Sharpening Metal Cutting Blades

- Use a sharpening file (special accessory) to sharpen dull cutting attachments. In case of more serious wear or nicks: Resharpen with a grinder or have the work done by a dealer – STIHL recommends a STIHL servicing dealer.
- Sharpen frequently, take away as little metal as possible – two or three strokes of the file are usually enough.

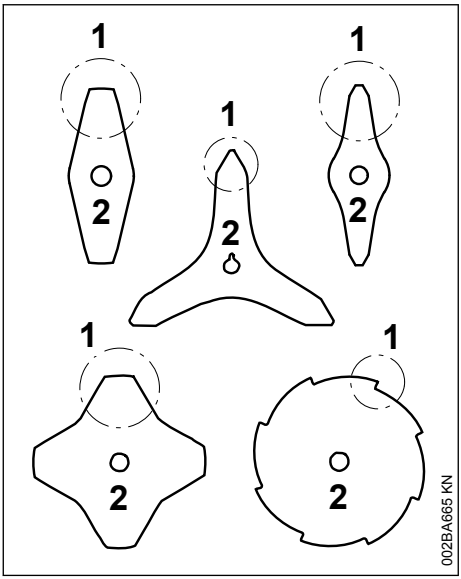

- Resharpen the teeth (1) uniformly – do not alter the contour of the parent blade (2) in any way.

See cutting attachment packaging for additional sharpening instructions. Keep the packaging for future reference.

25.1 Balancing

- After resharpening about 5 times, check the cutting attachment for out-of-balance on a STIHL balancer (special accessory) or have it checked by a dealer and re-balanced as necessary – STIHL recommends a STIHL servicing dealer.

26 Maintaining the Mowing Head

26.1 Placing power tool on the ground

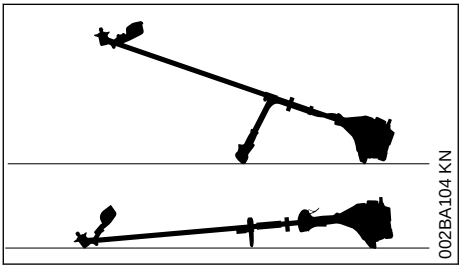

- Shut off the engine.
- Lay your power tool on its back so that the cutting attachment mounting face is pointing up.

26.2 Replacing Nylon Line

Always check the mowing head for signs of wear before replacing the nylon line.

WARNING

If there are signs of serious wear, replace the complete mowing head.

The nylon mowing line is referred to as "nylon line" or "line" in the following.

The mowing head is supplied with illustrated instructions for replacing the nylon line. Keep the instructions for the mowing head in a safe place.

- If necessary, remove the mowing head.

26.3 Adjusting Nylon Line

STIHL SuperCut

Fresh line is advanced automatically if the remaining line is **at least 6 cm (2 1/2 in)** long. The blade on the deflector trims overlong lines to the correct length.

STIHL AutoCut

- With the engine running, hold the rotating mowing head above the grass surface.
- Tap it on the ground once – fresh line is advanced and the blade on the deflector trims it to the right length.

Fresh line is advanced every time the mowing head is tapped on the ground. For this reason observe the mowing head's cutting performance during operation. If the mowing head is tapped on the ground too often, the line limiting blade will unnecessarily cut off unused lengths of nylon line.

Line feed operates only if both lines are still at least **2.5 cm (1 in)** long.

STIHL TrimCut

WARNING

To reduce the risk of injury, always shut off the engine before adjusting the nylon line by hand.

- Pull the spool up – rotate it about 1/6 turn counterclockwise until it engages – and allow it to spring back.
- Pull ends of the lines outward.

Repeat the above procedure as necessary until both lines reach the limiter blade on the deflector.

Rotating the spool from one stop to the next advances about **4 cm (1 1/2 in)** of fresh line.

26.4 Replacing Nylon Line

STIHL PolyCut

Precut lengths of nylon line can be fitted to the PolyCut in place of the cutting blades.

STIHL DuroCut, STIHL PolyCut

WARNING

To reduce the risk of injury, always shut off the engine before refilling the mowing head.

- Fit precut lengths of nylon line in the mowing head as described in the instructions supplied.

26.5 Replacing Cutting Blades

26.5.1 STIHL PolyCut

Always check the mowing head for signs of wear before installing new cutting blades.

WARNING

If there are signs of serious wear, replace the complete mowing head.

The thermoplastic cutting blades are referred to as "blades" in the following.

The mowing head is supplied with illustrated instructions for replacing the blades. Keep the instructions for the mowing head in a safe place.

WARNING

To reduce the risk of injury, always shut off the engine before installing the blades.

- Remove the mowing head.
- Replace blades as shown in the illustrated instructions.
- Mount the mowing head on the machine.

27 Maintenance and Care

The following intervals apply to normal operating conditions only. If your daily working time is longer or operating conditions are difficult (very dusty work area, etc.), shorten the specified intervals accordingly.		before starting work	after finishing work or daily	after each refueling stop	weekly	monthly	every 12 months	if problem	if damaged	as required
Complete machine	Visual inspection (condition, leaks)	X		X						
	Clean		X							
	Replace any damaged parts	X							X	
Control handle	Check operation	X		X						
Air filter	Visual inspection					X		X		
	Replace[2)]								X	
Manual fuel pump (if fitted)	Check	X								
	Have repaired by servicing dealer[1)]								X	
Pickup body (filter) in fuel tank	Have checked by servicing dealer[1)]							X		
	Have replaced by servicing dealer[1)]						X		X	X

The following intervals apply to normal operating conditions only. If your daily working time is longer or operating conditions are difficult (very dusty work area, etc.), shorten the specified intervals accordingly.		**before starting work**	**after finishing work or daily**	**after each refueling stop**	**weekly**	**monthly**	**every 12 months**	**if problem**	**if damaged**	**as required**
Fuel tank	Clean							X		X
Carburetor	Check idle adjustment – the cutting attachment must not rotate	X		X						
	Adjust idle speed									X
Spark plug	Adjust electrode gap							X		
	Replace after every 100 operating hours									
Cooling inlets	Visual inspection		X							
	Clean									X
Cylinder fins	Have cleaned by servicing dealer[1)]						X			
Valve clearance	If power is low or cranking effort very high, have valve clearance checked and, if necessary, adjusted by servicing dealer[1)]							X		X
Combustion chamber	Have cleaned after every 150 hours of operation by servicing dealer[1)]									X
All accessible screws and nuts (not adjusting screws)	Retighten									X
Antivibration elements	Check	X						X		X
	Have replaced by servicing dealer[1)]								X	
Cutting attachments	Visual inspection	X		X						
	Replace								X	
	Check tightness	X		X						
Metal cutting attachments	Sharpen	X								X
Gearbox lubrication	Check				X					
	Replenish									X
Safety labels	Replace								X	

[1)]STIHL recommends an authorized STIHL servicing dealer.
[2)]Only if there is a noticeable loss of engine power

28 Minimize Wear and Avoid Damage

Observing the instructions in this manual helps reduce the risk of unnecessary wear and damage to the power tool.

The power tool must be operated, maintained and stored with the due care and attention described in this owner's manual.

The user is responsible for all damage caused by non-observance of the safety precautions, operating and maintenance instructions in this manual. This includes in particular:
– Alterations or modifications to the product not approved by STIHL.
– Using tools or accessories which are neither approved or suitable for the product or are of a poor quality.
– Using the product for purposes for which it was not designed.
– Using the product for sports or competitive events.
– Consequential damage caused by continuing to use the product with defective components.

28.1 Maintenance Work

All the operations described in the "Maintenance Chart" must be performed on a regular basis. If these maintenance operations cannot be performed by the owner, they should be performed by a servicing dealer.

STIHL recommends that you have servicing and repair work carried out exclusively by an authorized STIHL servicing dealer. STIHL dealers are regularly given the opportunity to attend training courses and are supplied with the necessary technical information.

If these maintenance operations are not carried out as specified, the user assumes responsibility for any damage that may occur. Among other parts, this includes:
– Damage to the engine due to neglect or deficient maintenance (e.g. air and fuel filters), incorrect carburetor adjustment or inadequate cleaning of cooling air inlets (intake ports, cylinder fins).
– Corrosion and other consequential damage resulting from improper storage.
– Damage to the machine resulting from the use of poor quality replacement parts.

28.2 Parts Subject to Wear and Tear

Some parts of the power tool are subject to normal wear and tear even during regular operation in accordance with instructions and, depending on the type and duration of use, have to be replaced in good time. Among other parts, this includes:
– Cutting attachments (all types)
– Mounting hardware for cutting attachments (rider plate, nut, etc.)
– Deflectors for cutting attachments
– Clutch
– Filters (air, fuel)
– Rewind starter
– Spark plug
– Antivibration elements

29 Main Parts

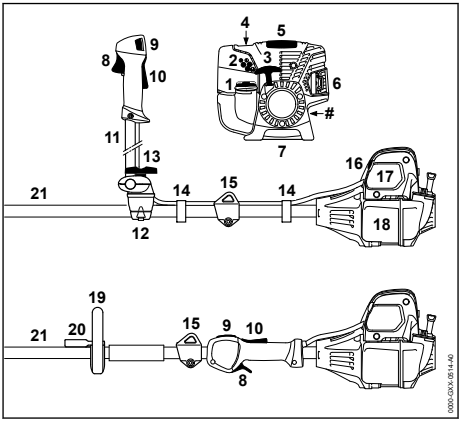

1 Tank cap
2 Carburetor adjusting screw
3 Starter grip
4 Manual fuel pump
5 Cover
6 Muffler
7 Machine support
8 Throttle trigger
9 Stop switch
10 Throttle trigger lockout
11 Bike handle (handlebar)
12 Handle support
13 Wing screw
14 Throttle cable retainer
15 Carrying ring

16 Choke knob

17 Air filter cover

18 Fuel tank

19 Loop handle

20 Barrier bar (country specific)

21 Drive tube

Serial Number

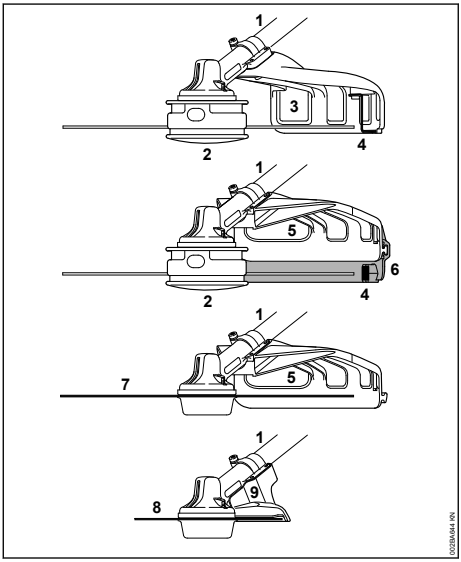

1 Drive tube

2 Mowing head

3 Deflector for mowing heads only

4 Line limiting blade

5 Deflector for all mowing attachments

6 Skirt for mowing heads

7 Metal mowing attachment

8 Circular saw blade

9 Limit stop for circular saw blades only

30 Specifications

30.1 Engine

STIHL single cylinder four-stroke engine with mixture lubrication

Displacement:	36.3cm^3
Cylinder bore:	43 mm
Piston stroke:	25 mm
Engine power:	1.4 kW (1.9 hp) at 8500 rpm
Idle speed:	2800 rpm
Cut-off speed (nominal value):	9500 rpm
Max. output shaft speed (cutting tool holder):	7150 rpm
Valve clearance	
Inlet valve:	0.10 mm
Exhaust valve:	0.10 mm

30.2 Ignition system

Electronic magneto ignition

Spark plug (suppressed):	NGK CMR 6 H, STIHL ZK C 10, BOSCH USR 4AC
Electrode gap:	0.5 mm

30.3 Fuel system

All-position diaphragm carburetor with integral fuel pump

Fuel tank capacity:	710 cm^3 (0.71 l)

30.4 Weight

Dry, without cutting attachment and deflector

FS 131:	5.8 kg
FS 131 R:	5.5 kg

30.5 Overall length

without cutting attachment: 1800 mm

30.6 Equipment features

R Loop handle

30.7 Noise and vibration values

For further details on compliance with Vibration Directive 2002/44/EC, see

www.stihl.com/vib

30.7.1 Cutting attachment

The idle and nominal maximum speed operating states are given equal consideration when calculating sound and vibration levels.

Sound pressure level L_{peq} in accordance with ISO 22868

with mowing head	
FS 131 with bike handle:	98 dB(A)
FS 131 R:	98 dB(A)
with metal mowing tool	
FS 131 with bike handle:	97 dB(A)
FS 131 R with barrier bar:	97 dB(A)

Sound power level L_{weq} to ISO 22868

with mowing head	
FS 131 with bike handle:	106 dB(A)
FS 131 R:	106 dB(A)
with metal mowing tool	

FS 131 with bike handle:	106 dB(A)
FS 131 R with barrier bar:	106 dB(A)

Vibration level $a_{hv,eq}$ in accordance with ISO 22867

with mowing head	Handle, left	Handle, right
FS 131 with bike handle:	4.9 m/s^2	4.9 m/s^2
FS 131 R:	6.2 m/s^2	6.2 m/s^2

with metal mowing tool	Handle, left	Handle, right
FS 131 with bike handle:	3.7 m/s^2	3.4 m/s^2
FS 131 R with barrier bar:	5.1 m/s^2	5.1 m/s^2

30.8 Interchangeable attachments

The noise and vibration values of the approved tool attachments are listed in the User Manual of each tool attachment.

The K-factor in accordance with Directive 2006/42/EC is 2.0 dB(A) for the sound pressure level and sound power level; the K-factor in accordance with Directive 2006/42/EC is 2.0 m/s^2 for the vibration level.

30.9 REACH

REACH is an EC regulation and stands for the Registration, Evaluation, Authorization and Restriction of Chemical substances.

For information on compliance with the REACH regulation (EC) No. 1907/2006 see

www.stihl.com/reach

30.10 Exhaust Emissions

The CO_2 value measured in the EU type approval procedure is specified at

www.stihl.com/co2

in the product-specific technical data.

The measured CO_2 value was determined on a representative engine in accordance with a standardized test procedure under laboratory conditions and does not represent either an explicit or implied guarantee of the performance of a specific engine.

The applicable exhaust emission requirements are fulfilled by the intended usage and maintenance described in this User Manual. The operating license shall be void if the engine is modified in any way.

31 Maintenance and Repairs

Users of this machine may only carry out the maintenance and service work described in this user manual. All other repairs must be carried out by a servicing dealer.

STIHL recommends that you have servicing and repair work carried out exclusively by an authorized STIHL servicing dealer. STIHL dealers are regularly given the opportunity to attend training courses and are supplied with the necessary technical information.

When repairing the machine, only use replacement parts which have been approved by STIHL for this power tool or are technically identical. Only use high-quality replacement parts in order to avoid the risk of accidents and damage to the machine.

STIHL recommends the use of original STIHL replacement parts.

Original STIHL parts can be identified by the STIHL part number, the STIHL® logo and the STIHL parts symbol (the symbol may appear alone on small parts).

32 Disposal

Contact the local authorities or your STIHL servicing dealer for information on disposal.

Improper disposal can be harmful to health and pollute the environment.

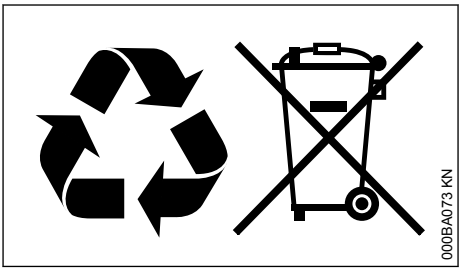

- Take STIHL products including packaging to a suitable collection point for recycling in accordance with local regulations.
- Do not dispose with domestic waste.

33 EC Declaration of Conformity

ANDREAS STIHL AG & Co. KG
Badstr. 115
D-71336 Waiblingen

Germany

declare under our sole responsibility that

Designation:	Brushcutter
Make:	STIHL
Series:	FS 131 FS 131 R
Serial identification number:	4180
Displacement:	36.3 cm^3

conforms to the relevant provisions of Directives 2011/65/EU, 2006/42/EC, 2014/30/EU and 2000/14/EC and has been developed and manufactured in compliance with the following standards in the versions valid on the date of production:

EN ISO 11806-1, EN 55012, EN 61000-6-1

The measured and the guaranteed sound power level have been determined in accordance with Directive 2000/14/EC, Annex V, and standard ISO 10884.

Measured sound power level

FS 131:	109 dB(A)
FS 131 R:	109 dB(A)

Guaranteed sound power level

FS 131:	111 dB(A)
FS 131 R:	111 dB(A)

Technical documents deposited at:

ANDREAS STIHL AG & Co. KG
Produktzulassung

The year of manufacture and serial number are applied to the product.

Waiblingen, 01.08.2022

ANDREAS STIHL AG & Co. KG

pp

Robert Olma, Vice President, Regulatory Affairs & Global Governmental Relations

CE

34 UKCA Declaration of Conformity

ANDREAS STIHL AG & Co. KG
Badstr. 115
D-71336 Waiblingen

Germany

declare under our sole responsibility that

Designation:	Brushcutter
Make:	STIHL
Series:	FS 131 FS 131 R
Serial identification number:	4180
Displacement:	36.3 cm^3

conforms to the relevant provisions of UK regulations The Restriction of the Use of Certain Hazardous Substances in Electrical and Electronic Equipment Regulations 2012, Supply of Machinery (Safety) Regulations 2008, Electromagnetic Compatibility Regulations 2016 and Noise Emission in the Environment by Equipment for use Outdoors Regulations 2001 and has been manufactured in compliance with the following standards in the versions valid on the date of production:

EN ISO 11806-1, EN 55012, EN 61000-6-1

The measured and guaranteed sound power levels were determined in accordance with the UK regulation Noise Emission in the Environment by Equipment for use Outdoors Regulations 2001, Schedule 8, using the ISO 10884 standard.

Measured sound power level

FS 131:	109 dB(A)
FS 131 R:	109 dB(A)

Guaranteed sound power level

FS 131:	111 dB(A)
FS 131 R:	111 dB(A)

Technical documents deposited at:

ANDREAS STIHL AG & Co. KG

The year of manufacture and serial number are indicated on the product.

Waiblingen, 01.08.2022

ANDREAS STIHL AG & Co. KG

pp

Robert Olma, Vice President, Regulatory Affairs & Global Governmental Relations

UK CA

35 Addresses

www.stihl.com

0458-432-0121-B

www.stihl.com

0458-432-0121-B